VACON® NX
AC DRIVES

RFI-, DU/DT- AND SINE-FILTERS USER MANUAL

VACON®

TABLE OF CONTENTS

Document ID:DPD01805C
Revision release date: 12.08.2020

1. General 4
1.1 Intended use 4
1.2 Safety notice 4
1.3 General 5
1.4 Type code 6
2. Filter types 7
2.1 RFI-filters 7
2.1.1 General 7
2.1.2 RFI filter types 8
2.1.3 External RFI filter types 11
2.2 dU/dt filters 14
2.2.1 General 14
2.2.2 dU/dt filter types 18
2.2.3 Installation 22
2.3 Sine filters 28
2.3.1 General 28
2.3.2 Sine filter types 29
2.3.3 Installation 32
3. Drawings and diagrams 36
3.1 Dimension drawings 36
3.1.1 RFI footprint filters 36
3.1.2 External RFI filters 40
3.1.3 dU/dt- and sine-filters 43
3.2 dU/dt-filters in enclosed drive 51
3.3 Safe operating area for dU/dt-filters 57
3.4 Output current for frequency operation 62

NOTE! Download the English and French product manuals with applicable safety, warning and caution information from https://www.danfoss.com/en/service-and-support/.

REMARQUE Vous pouvez télécharger les versions anglaise et française des manuels produit contenant l'ensemble des informations de sécurité, avertissements et mises en garde applicables sur le site https://www.danfoss.com/en/service-and-support/.

1. GENERAL

1.1 INTENDED USE

This document covers the following filter types:

- RFI - filters on the input side, and
- dU/dt - filters and sine - filters on the output side of the VACON® NX AC drive.

1.2 SAFETY NOTICE

	WARNING: All internal components and component boards, with the exception of the galvanically separated input and output terminals are connected to high voltage when the AC drive is connected to the mains. It is extremely dangerous to touch these live parts. Touch may cause severe injury or death.

NOTE!
The I/O terminals are separated from the high potential of the mains, but the relay outputs and other I/O terminals may carry high voltages even if the AC drive is not connected to the mains.

NOTE!
Do not perform any high pot tests (megger) on the filters. The VACON® RFI filters are intended for use in grounded supplies only. For ungrounded (IT) supplies, contact our representative or us.

General safety instructions

WARNING: Installation and service work only by qualified electricians.

WARNING: No work on an operating unit. Contact with the electrical parts may be fatal, even after disconnection from the power network.

WARNING: To avoid electrical shock hazard:
- Before servicing the unit, wait at least the voltage discharge time stated in the user guide for the corresponding AC drive.
- Dangerouse voltage may be on the unit even when the motor is not rotating.

WARNING: Never attempt to repair a defective unit.

WARNING: The unit surface temperature rises during operation. Avoid any contact.

Grounding

WARNING: The unit must be grounded before switching the power on.
Please refer to the data sheet for detailed information.

Screening

It is recommended to use shielded cables to reduce noise, electromagnetic interference and to prevent malfunctions in the installation.
Preferably:

- Screened and/or twised cable between the converter output and unit input (U1, V1, W1).
- Shielded cables between the unit output (U2, V2, W2) and the motor.
- In case of unscreened cables it should be ensured that the installation minimizes the possibility of cross-couplings with other cables which are carrying sensitive signals. This can be achieved by mea-sures such as cable segregation and mounting in earthed cable trays.

1.3 General

AC drives do not supply a smoothly changing AC voltage to the motor, but a pulsed DC voltage. The sum of the three phase voltages does not sum to zero, as in the case of mains supply, leading to the presence of a common-mode voltage between the motor coils and ground.

The pulses fed to the motor have very steep flanks, and the rate of voltage change (dU/dt) may reach several kV/µs. Unloaded IGBTs will switch at speeds of about 6 - 8 kV/µs, when a motor cable and motor is connected, and the speed will drop to about 2 kV/µs. The voltages caused by these steep pulses may be dangerous to the insulation of the motor.

The high switching speeds give rise to EMC effects, both as radiated disturbances as well as disturbance currents in galvanically connected cables. The radiated interference is usually grounded by the metallic enclosure of the drive as well as through the use of shielded cable, and does not cause any problems in the environment. The galvanically coupled interference may have to be filtered in order to achieve EMC compliance. The VACON® NX range of AC drives contain an internal filter for bringing the drives into compliance with the standard (specifically IEC 61800-3:2004). In some cases, additional filtering is required. Both input and output filters are available for the VACON® NX range of drives. The drive may also have to be protected against various overvoltages occurring in the supply. On the input side RFI filters and additional chokes can be installed, on the output side dU/dt filters or sine filters.

1.4 TYPE CODE

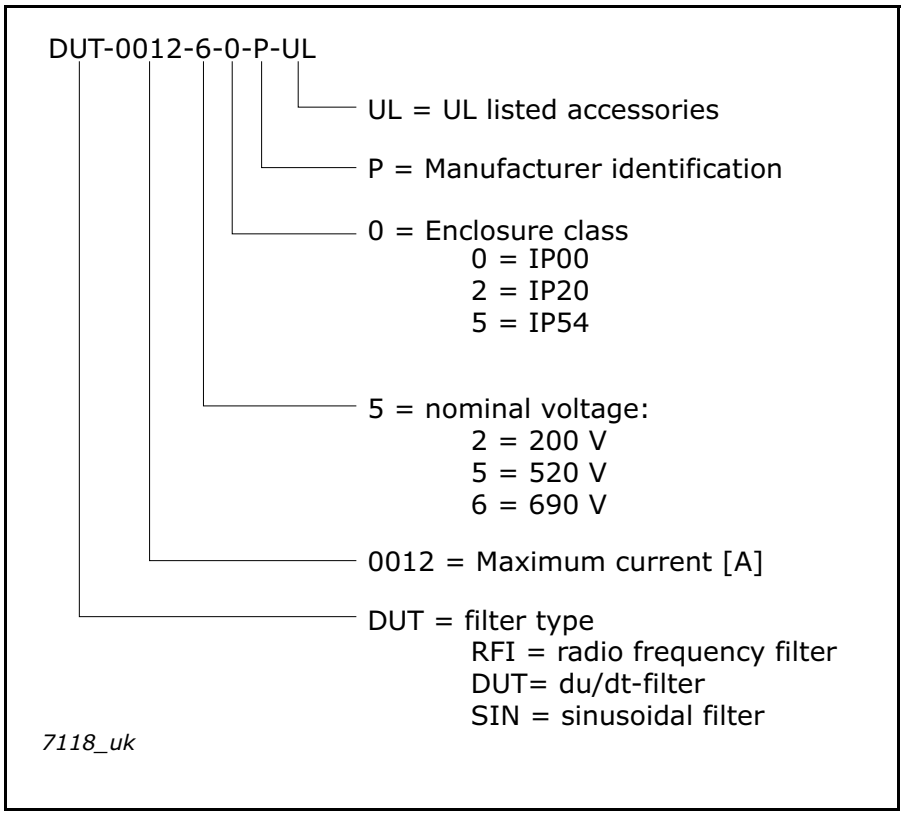

Figure 1. Type code for VACON® NX filters

2. FILTER TYPES

2.1 RFI-FILTERS

2.1.1 GENERAL

Table 1 shows the filters used to make the VACON® NX range of AC drives comply with EN/IEC 61800-3 for the domestic and industrial environment, in case the basic drive does not comply. All enclosure sizes 4 - 9 comply with the requirements of EN/IEC 61800-3, ed 2 for the categories 1 and 2, the 690 V versions for category 3. The common DC bus system components and drives which have rated current higher than 400 A are designed to category 4. Therefore the basic modules do not have any specific compliance, but the whole installation has to be designed to comply with the requirements.

The stand - alone and VACON® NXC solutions comply with category 3 requirements.

Definitions:

First environment

Environment that includes domestic premises and establishments directly connected without intermediate transformers to a low-voltage power supply network, which supplies buildings used for domestic purposes.

NOTE! Houses, apartments, commercial premises or offices in a residential building are typical examples of the first environment location.

Second environment

Environment that includes all establishments other than those directly connected to a low voltage power supply network, which supplies buildings used for domestic purposes.

NOTE! Industrial areas, technical areas of any building fed from a dedicated transformer are typical examples of the second environment locations (IEC 923/04).

EMC designation C => fulfils the requirements of category 1: PDS (power drive system (AC drive plus motor)) of rated voltage less than 1000 V, intended for use in the first environment.

EMC designation H => fulfils the requirements of category 2: PDS of rated voltage less than 1000 V, which is neither a plug-in device nor a movable device and, when used in the first environment, is intended to be installed and commissioned only by a professional.

NOTE! A professional is a person or an organization having necessary skills in installing and/or commissioning power drive systems, including their EMC aspects.

EMC designation L => fulfils the requirements of category 3: PDS of rated voltage less than 1000 V, intended for use in the second environment and not intended for use in the first environment.

EMC designation N => fulfils the requirements of category 4: PDS of rated voltage equal to or above 1000 V, or rated current equal to or above 400 A, or intended for use in complex systems in the second environment.

NOTE! In this case the compliance has to be verified case by case.

The filters must be correctly installed and grounded.

There are no standards at present for IT supplies (floating supplies) - the EMC code T shows that the drives and drive modules have very small ground capacitance making them suitable for use on IT supplies. The small capacitance is required as larger values would cause the installed ground circuit monitoring circuits to fail. We recommend the use of monitors manufactured by Bender.

The VACON® NX AC drives comply with the immunity requirements EN/IEC 61800-3; 2004, second environment as standard.

Note that the filters RFI-0012-5-IP54 to RFI-0105-5-IP54 are designed to fit mechanically directly to the corresponding drive. All others are loose and must be connected to the drive separately.

2.1.2 RFI FILTER TYPES

Table 1. RFI footprint filters for drive enclosure sizes 4-7

Filter type code	Drawing number	Manufacturer's part code	Rated voltage, 3~, 50-60 Hz [V AC]	Nominal current at 50°C [A]	Dimensions W x H x D [mm]	W[kg]	IP class
RFI-0012-5-IP54	70CTC1100857	FS32821-16-99	520	16	128 x 395 x 61.5	2.8	IP54
RFI-0031-5-IP54	70CTC1100865	FS32821-42-99	520	42	144 x 490 x 61.5	4.4	IP54
RFI-0061-5-IP54	70CTC1100869	FS32821-75-99	520	75	195 x 625 x 90	8.2	IP54
RFI-0105-5-IP54	70CTC1100887	FS32821-130-99	520	130	230 x 745 x 100	15.5	IP54

Suitability

Table 2. Drive suitability for 200 V AC and 500 V AC air-cooled drives, enclosure sizes 4-7

200 V AC drive	Filter	500 V AC drive	Filter
NX_0003-0012 2	RFI-0012-5-IP54	NX_0003-0012 5	RFI-0012-5-IP54
NX_0017-0031 2	RFI-0031-5-IP54	NX_0016-0031 5	RFI-0031-5-IP54
NX_0048-0061 2	RFI-0061-5-IP54	NX_0038-0061 5	RFI-0061-5-IP54
NX_0075-0088 2	RFI-0105-5-IP54	NX_0072-0105 5	RFI-0105-5-IP54

Installation

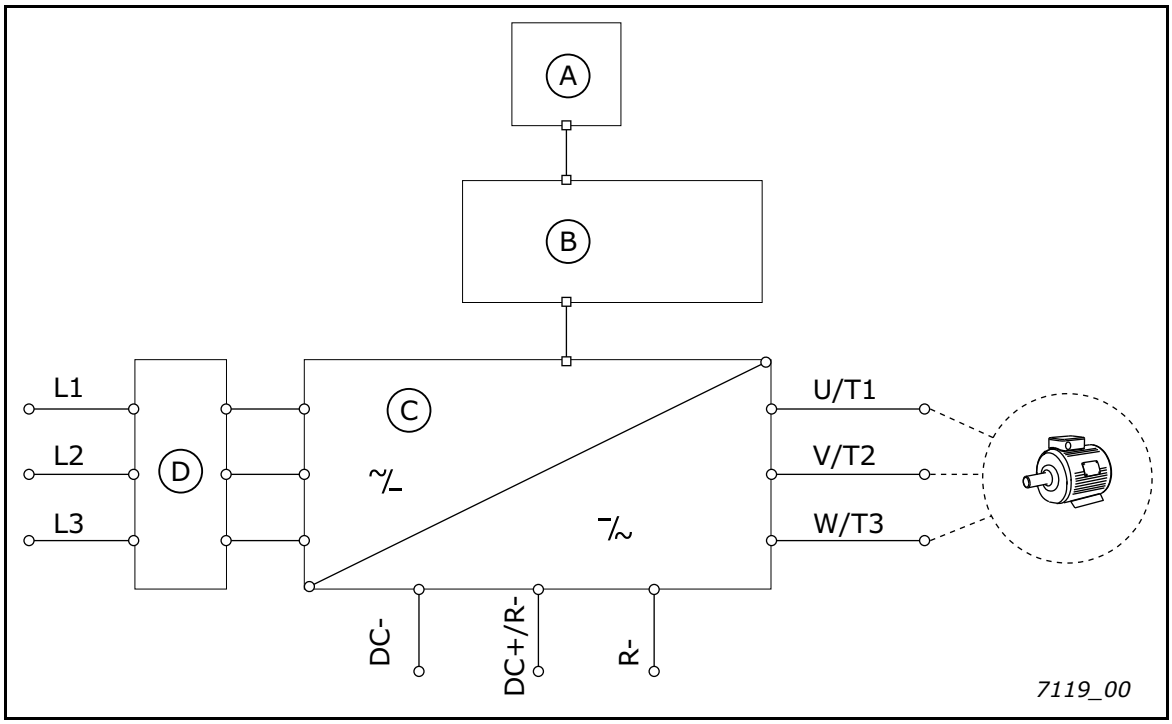

#	Reference	#	Reference
A	Keypad	C	Power unit
B	Control	D	RFI filter

Figure 2. RFI filter installation principal diagram

Footprint RFI-filter types can be installed in two ways. Back installation procedure is shown in Figure 3 and side installation procedure is shown in Figure 4.

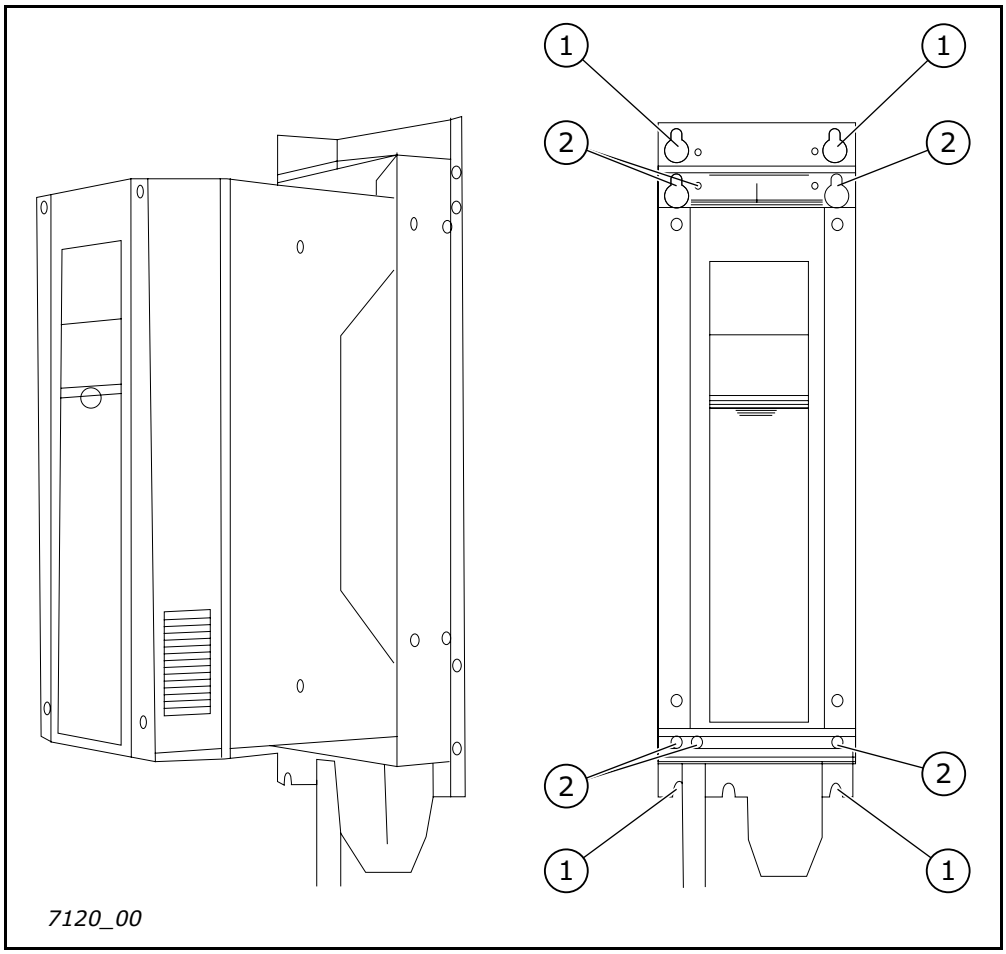

#	Reference	#	Reference
1	Ø7	2	Maximum screw length for AC drive mounting; M6x16

Figure 3. RFI filter back installation

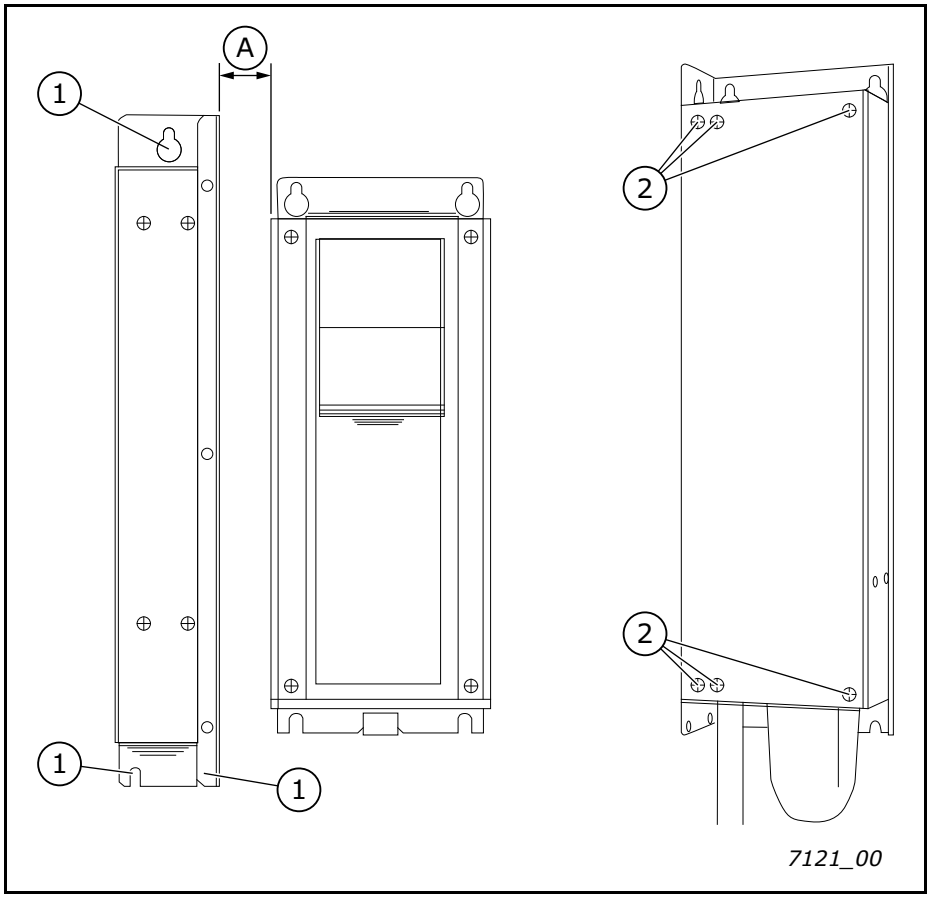

#	Reference	#	Reference
1	Ø7	2	Maximum screw length for AC drive mounting; M6x16
A	minimum 20 mm		

Figure 4. RFI filter side installation

Dimension data

Detailed dimension drawings in Chapter 3.1.

2.1.3 External RFI filter types

The external filters must be mounted close to the input of the drive or drive system. Note that the cable layout must be such, that the maximum physical separation exists between the filter input and output cables. Otherwise the effect of the filter could be negated.

Table 3. External RFI filter types

Filter type code	Manufacturer's part code	Rated voltage, 3~, 50-60 Hz [V AC]	Nominal current at 50°C [A]	Nominal current at 40°C [A]	Power loss [W]	IP class
RFI-0130-5-0	FN3258H-130-35	520	130	142.4	43.1	IP20
RFI-0150-5-0	FN3359-150-28	520	150	164	24	IP00
RFI-0250-5-0	FN3359-250-28	520	250	250	49	IP00
RFI-0320-5-0	FN3359-320-99	520	320	350	19	IP00
RFI-0400-5-0	FN3359-400-99	520	400	438	29	IP00
RFI-0600-5-0	FN3359-600-99	520	600	657	44	IP00
RFI-1000-5-0	FN3359-1000-99	520	1000	1095	60	IP00
RFI-0042-6-0	FN258HV-42-33	690	42	46	30	IP20
RFI-0100-6-0	FN258HV-100-35	690	100	109.5	30	IP20
RFI-0180-6-0	FN3359HV-180-28	690	180	197	34	IP00
RFI-0300-6-0	FN3359HV-320-99	690	320	350	19	IP00
RFI-0400-6-0	FN3359HV-400-99	690	400	438	29	IP00
RFI-0600-6-0	FN3359HV-600-99	690	600	657	44	IP00
RFI-1000-6-0	FN3359HV-1000-99	690	1000	1095	60	IP00

Suitability

Table 4. Drive suitability for 200 V AC, 500 V AC and 690 V AC air-cooled drives

200 V AC drive	Filter	500 V AC drive	Filter	690 V AC drive	Filter
NX_ 0075-0114 2	RFI-0130-5-0	NX_ 0072-0105 5	RFI-0130-5-0	NX_0004-0034 6	RFI-0042-6-0
NX_0140 2	RFI-0150-5-0	NX_0140 5	RFI-0150-5-0	NX_0041-0080 6	RFI-0100-6-0
NX_0170-0205 2	RFI-0250-5-0	NX_0168-0205 5	RFI-0250-5-0	NX_0125-0170 6	RFI-0180-6-0
NX_0261-0300 2	RFI-0320-5-0	NX_0261-0300 5	RFI-0320-5-0	NX_0208-0261 6	RFI-0300-6-0
		NX_0385	RFI-0400-5-0	NX_0325-0385 6	RFI-0400-6-0
		NX_0520-0590 5	RFI-0600-5-0	NX_0416-0590 6	RFI-0600-6-0
		NX_0650-0920 5	RFI-1000-5-0	NX_0650-820 6	RFI-1000-6-0

Table 5. Drive suitability for 500 V AC and 690 V AC liquid-cooled drives

500 V AC drive	Filter	690 V AC drive	Filter
NX_0087-0105 5	RFI-0130-5-0	NX_0170 6	RFI-0180-6-0
NX_0140 5	RFI-0150-5-0	NX_0208-0261 6	RFI-0300-6-0
NX_0168-205 5	RFI-0250-5-0	NX_0325-0385 6	RFI-0400-6-0
NX_0261-0300 5	RFI-0320-5-0	NX_0416-0590 6	RFI-0600-6-0
NX_0385 5	RFI-0400-5-0	NX_0650-0920 6	RFI-1000-6-0
NX_0460-0590 5	RFI-0600-5-0		
NX_0650-0920 5	RFI-1000-5-0		

Installation recommendations:

The motor cable must be kept as short as possible both inside and outside the enclosure. This means that the optimum location for the drive is close to the driven motor in wall mounted units or close to the cable conduit hole in enclosed units.

Separate the supply cable and the motor cable by at least 20 cm (8 in). If it is not possible to achieve spatial separation, use a separator shield, which must be solidly and multiply grounded. The cable from the filter to the drive must be shielded. The grounding must be done through a large area.

If several drives are used, check if it is feasible to use one common filter for all drives. In that case, additional filtering of the drives is unnecessary. The cable between the filter and the drives should be kept as short as possible. This usually means, that the drives and filter are mounted adjacent to one another.

Ground the filter over a large surface to the mounting plate or the back of the enclosure. If the plate is varnished, remove the varnish to ensure a good electrical connection at the screw locations.

All metal parts of the enclosure must be connected to one another with low impedance, large area cables. The door must be grounded through short flexible leads to the frame of the enclosure

Cross the cables at the right angle (90°)

Connect all unused poles of all cables to the ground

Dimension data

Table 6. External RFI filter dimension data

Dimensions																													Weight
Filter type code	Drawing number	A	B	C	D	E	F	G	H	I	J	K	L	L2	M	N	O	S	T	U	V	W	X	Y	Z	X*	Y*	Z*	m [kg]
RFI-0130-5-0	70CMC10375	270	90	150	240	255	65	7	2	45	M10	45		64															4.5
RFI-0150-5-0	70CMC10377	300	210	120	160	120	185	12	2	33	M10	55	30		420	171	127			50									6.5
RFI-0250-5-0	70CMC10377	300	230	125	180	120	205	12	2	33	M10	66	35		420	191	132			55									7
RFI-0320-5-0	70CMC10376 70CMC10379	300	260	115	210	120	235	12	2	43	M12	20	20		440	221	122			60	25	6	15	40	11				10.5
RFI-0400-5-0	70CMC10376 70CMC10379	300	260	115	210	120	235	12	2	43	M12	20	20		440	221	122			60	25	6	15	40	11				10.5
RFI-0600-5-0	70CMC10376 70CMC10379	300	260	135	210	120	235	12	2	43	M12	20	20		510	241	177			60	25	8	15	40	11				11
RFI-1000-5-0	70CMC10376 70CMC10379	350	280	170	230	145	255	12	3	53	M12	25	25		510	241	177			60	40	8	20	50	14				18
RFI-0042-6-0	70CMC10378	329	70	185	300	314	45	7	2	25	M6	35	130													AWG8	500±10	12	2.6
RFI-0100-6-0	70CMC10378	379	90	220	350	364	65	7	2	45	M10	45	130																5.6
RFI-0180-6-0	70CMC10377	300	210	120	160	120	185	12	2	33	M10	55	30		420	171	127			50									6.5
RFI-0300-6-0	70CMC10376 70CMC10379	300	260	115	210	120	235	12	2	43	M12	20	20		440	221	122			60	25	6	15	40	11				10.5
RFI-0400-6-0	70CMC10376 70CMC10379	300	260	115	210	120	235	12	2	43	M12	20	20		440	221	122			60	25	6	15	40	11				10.5
RFI-0600-6-0	70CMC10376 70CMC10379	300	260	135	210	120	235	12	2	43	M12	20	20		440	221	142			60	25	8	15	40	11				11
RFI-1000-6-0	70CMC10376 70CMC10379	350	280	170	230	145	255	12	3	53	M12	25	25		510	241	177			60	25	8	20	50	14				18

Detailed dimension drawings in Chapter 3.1.

Local contacts: https://www.danfoss.com/en/contact-us/contacts-list/

2.2 dU/dt FILTERS

2.2.1 General

The VACON® NX drives use IGBT transistors as an output element. These semiconductors create the correct voltage to the motor switching it at very high speed (4 - 6 kV/s) with an unloaded IGBT. This high speed will, under certain circumstances, cause extra voltage stress on the main insulation of the motor.

Usually there are no problems with motors designed for a 400 V supply. Such motors are usually designed for a voltage level of 1200 V, which exceeds the AC drive induced stress.

In 500 V supplies the motor has to withstand at least 1600 V. A dU/dt filter is often required with these motors in order not to exceed the allowable voltage stress. In 690 V supplies the motor has to withstand at least 1800 V, and a dU/dt filter is required in these cases.

NOTE! In uncertain cases, confirm the rating of the motor in AC drive application with the motor manufacturer.

NOTE! Set the switching frequency parameter to correspond to the value printed on the nameplate of the filter and the output voltage level. Do not increase the switching frequency above the rated value of the filter. Decreasing it below is allowed.

The high switching speed (about 2 kV/s) with the motor and cable connected, creates a travelling wave in the cable. The speed of this wave is set by the cable's wave impedance, usually about 50 - 100 Ω. This is less than the motor's wave impedance, which is on the order of 1 kΩ. As the travelling voltage wave hits this discontinuity, it is reflected back, increasing the instantaneous voltage on the motor winding. The wave is reflected back and forth between motor and drive and finally the steady state voltage is reached.

Winding voltage stresses

The rapid change in voltage is not distributed equally over all windings, but the first windings show higher voltage stresses than the inner ones, due to the capacitive coupling between the windings. Modern motors can withstand a voltage rise times of < 2 kV/µs. In case of doubt, use a dU/dt filter or contact the motor manufacturer.

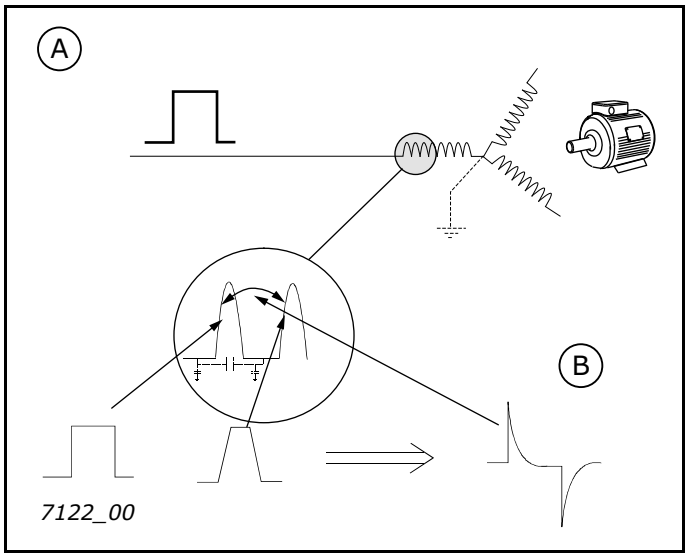

#	Reference	#	Reference
A	Incoming pulse	B	Winding voltage

Figure 5. Change of the voltage shape in winding

Voltage stress

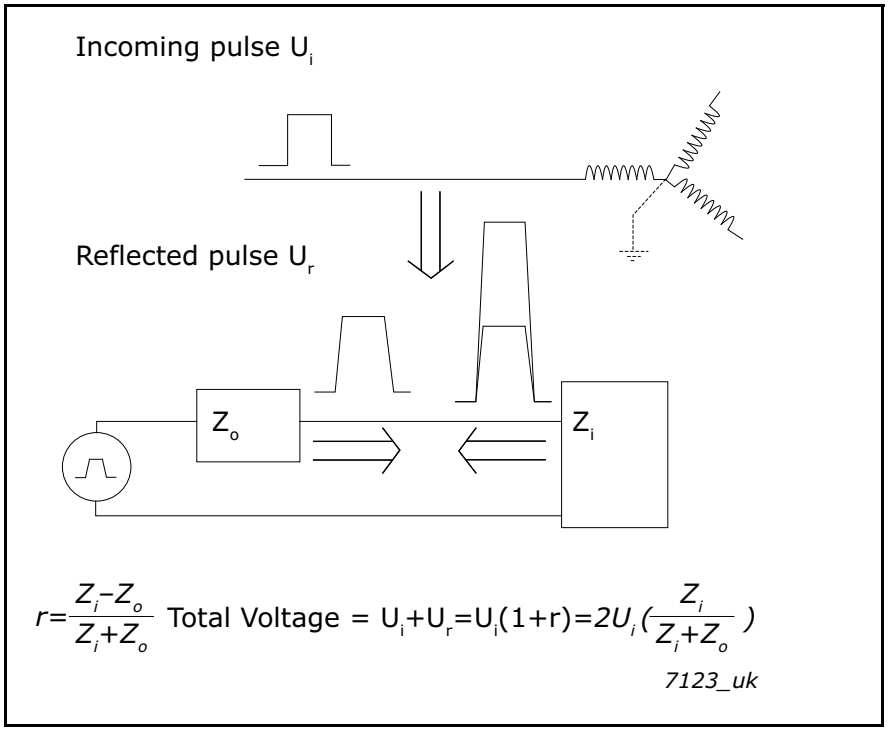

Figure 6. Voltage pulse reflection

The reflected voltage maximum value is 2 × DC-link voltage, in practice 1.8 ...1.9 × U DC. The voltage is fully developed at cable lengths > 5 m.

Note that the DC-link voltage is increased if the supply is high or if an active front end maintains a high DC-link voltage or if the drive is in a regenerative (braking) mode. If this voltage stress is too high, it is recommended to use the dU/dt filters.

A dU/dt filter is an undammed serial LC filter, with a resonance frequency of about 120 kHz - this will limit the voltage rise speed to < 1000 V/µs. If lower speeds are required, the capacitance can be increased.

The filter, cable and motor form a complex high frequency circuit, which causes a voltage at the motor with different rise times and peak values depending on the cable length, type, etc.

Typical values as a function of cable length are as follows:

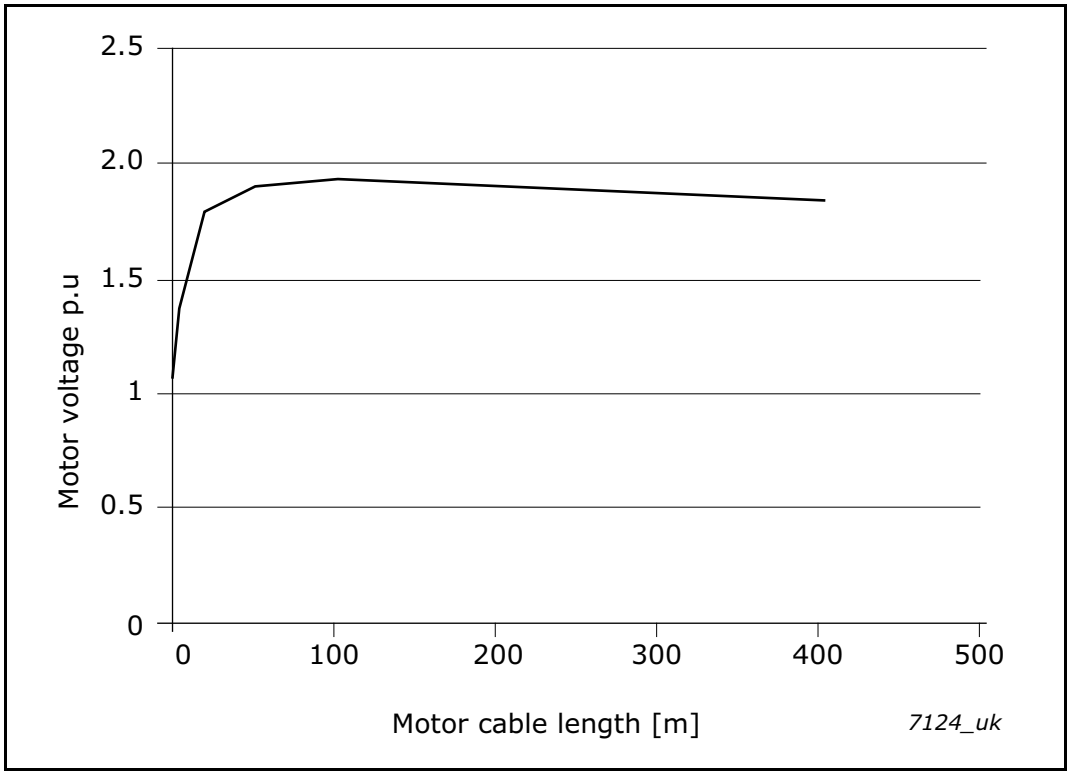

Figure 7. Typical motor voltage p.u. as a function of motor cable length (m)

Due to the inductance in series with the load there is a voltage drop across the dU/dt filter, decreasing the voltage available for the motor. At full rated current this drop is about 5 V.

Filters are chosen so that their rated current > drive rated current. They will thermally withstand the same overload specifications as the drive. For VACON® NX there is only one range of filters, suitable for the voltage range from 380 to 690 V. The filters can also be used at lower voltages, if required.

NOTE! The dU/dt filters are designed for a switching frequency of 1.5 kHz for 690 V AC and 3.6 kHz for 500 V AC voltage level. DO NOT EXCEED THIS VALUE, as there is a risk of overheating. Using lower switching frequencies is not a problem.

NOTE! The dU/dt filters are designed for the maximum output frequency of 70 Hz. If this value is exceeded there is a risk of overheating. If higher output frequency is requested then the drive output current is needed to decrease. Motor frequency de-rating for different filter types is shown in Chapter 3.4.

Recommendations:

Figure 8, Table 7 and Table 8 show the filter and motor requirements based on the nominal voltage level and IEC & NEMA motor standards.

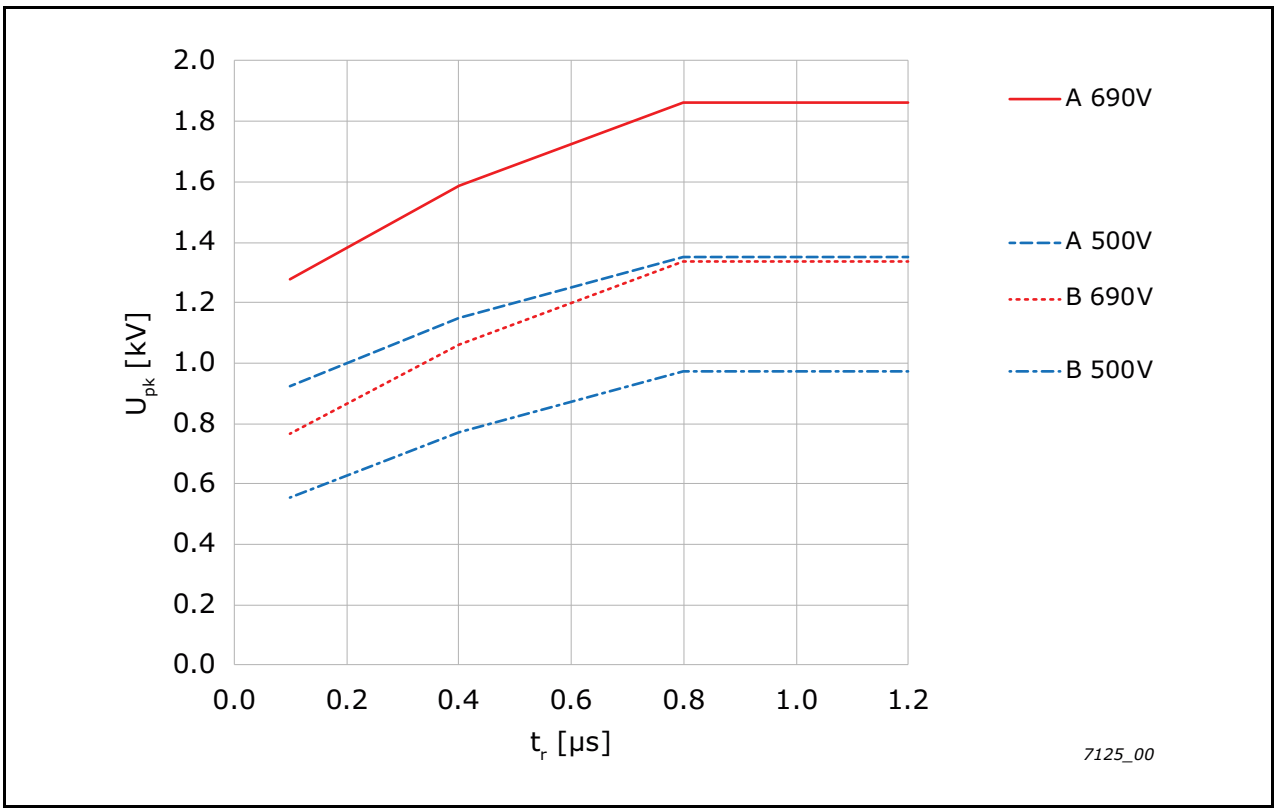

Figure 8. IEC 60034-25-ed3: Limiting curves of impulse voltage U_{pk} as a function of the peak rise time t_r, measured between two motor phase terminals.

- Curve A 500/690 V = Typical electrical machines
- Curve B 500/690 V = Electrical machines with older insulation system

Table 7. Recommendations of dU/dt usage based on the voltage class and motor insulation system

Nominal voltage U_n	Filters and motor isolation requirements
$U_n \leqslant 420$ V	No filters required if the motor insulation is according to curve A 500 V - IEC60034-25
420 V $\leqslant U_n \leqslant$ 500 V	dU/dt filter is needed for motor insulation according to curve A 500 V - IEC60034-25 or No filters required if the motor insulation is according to curve A 690 V - IEC60034-25
500 V $\leqslant U_n \leqslant$ 690 V	dU/dt filter is needed for motor insulation according to curve A 690 V - IEC60034-25 or No filter if motor is wound with medium voltage technology - form wound

Table 8. Recommendations of dU/dt usage based on the voltage class and NEMA motor insulation system, NEMA MG1, Part 31

For motors with $U_n \geqslant 600$ V	$U_{peak} = 3.1 \times U_n$
For motors with $U_n < 600$ V	$U_{peak} = 2.04 \times U_n$

2.2.2 dU/dt FILTER TYPES

The available IP ratings are IP00, IP21 and IP54.

Table 9. dU/dt-filter types

Filter type code	Manufacturer's part code	Rated voltage, 3~ [V AC]	Nominal current at 40°C [A]	Nominal current at 50°C [A]	Power loss at 40°C [W]	IP class
DUT-0012-6-0	DUDT12D	200-690	12	10.6	70	IP00
DUT-0025-6-0	DUDT25D	200-690	25	22	120	IP00
DUT-0055-6-0	DUDT55D	200-690	55	48	175	IP00
DUT-0080-6-0	DUDT80D	200-690	80	70	205	IP00
DUT-0130-6-0-P*	942-1062	200-690	130	115	185	IP00
DUT-0210-6-0-P*	945-1017	200-690	210	185	210	IP00
DUT-0280-6-0-P*	957-952	200-690	280	245	350	IP00
DUT-0350-6-0-P*	958-936	200-690	350	310	410	IP00
DUT-0420-6-0-P*	958-934	200-690	420	370	450	IP00
DUT-0600-6-0-P*	959-904	200-690	600	530	580	IP00
DUT-0820-6-0-P*	959-905	200-690	820	720	750	IP00
DUT-1200-6-0-P*	978-925	200-690	1200	1055	980	IP00
DUT-1500-6-0-P*	983-916	200-690	1500	1320	1100	IP00
DUT-2300-6-0-P	998-917	200-690	2300	2020	2900	IP00
DUT-0012-6-2-P	917-964/S1	200-690	12	10.5	65	IP21
DUT-0034-6-2-P	918-1004/S1	200-690	34	30	85	IP21
DUT-0055-6-2-P	923-947/S1	200-690	55	48	120	IP21
DUT-0100-6-2-P	928-956/S1	200-690	100	88	150	IP21
DUT-0210-6-2-P	945-1017/S1	200-690	210	185	210	IP21
DUT-0012-6-5-P	913-940	200-690	12	10.5	45	IP54
DUT-0034-6-5-P	918-1009	200-690	34	30	75	IP54
DUT-0055-6-5-P	927-944	200-690	55	48	80	IP54
DUT-0100-6-5-P	943-1018	200-690	100	88	110	IP54
DUT-0210-6-5-P	958-949	200-690	210	185	180	IP54
DUT-0280-6-0-S	FS7203-280-99-03	200-690	280	-	-	IP00
DUT-0420-6-0-S	FS7203-420-99-03	200-690	420	-	-	IP00
DUT-0590-6-0-S	FS7203-590-99-03	200-690	590	-	-	IP00
DUT-0820-6-0-S	FS7203-820-99-03	200-690	820	-	-	IP00
DUT-1250-6-0-S	FS7203-1250-99-03	200-690	1250	-	-	IP00
DUT-1600-6-0-S	FS7203-1600-99-03	200-690	1600	-	-	IP00

*) IP00 filters DUT-0012-6-0 ... DUT-1500-6-0-P types are also available in UL listed accessories models. Filter type code syntax is -UL and manufacturer's part code /UL e.g. DUT-0130-6-0-P-UL, 942-1062/UL. Filter rated voltage for UL usage is 600 V AC.

Suitability

Table 10. Drive suitability for 200 V AC air-cooled drives

200 V AC drive	Filter, IP00 class		200 V AC drive	Filter, IP 21 class	Filter, IP 54 class
NX_0003-0012 2	DUT-0012-6-0	-	NX_0003-0012 2	DUT-0012-6-2-P	DUT-0012-6-5-P
NX_0017-0025 2	DUT-0025-6-0	-	NX_0017-0031 2	DUT-0034-6-2-P	DUT-0034-6-5-P
NX_0031-0048 2	DUT-0055-6-0	-	NX_0048 2	DUT-0055-6-2-P	DUT-0055-6-5-P
NX_0061-0075 2	DUT-0080-6-0	-	NX_0061-0088 2	DUT-0100-6-2-P	DUT-0100-6-5-P
NX_0088-0114 2	DUT-0130-6-0-P	-	NX_0114-0205 2	DUT-0210-6-2-P	DUT-0210-6-5-P
NX_0140-0205 2	DUT-0210-6-0-P	-	-	-	-
NX_0261 2	DUT-0280-6-0-P	DUT-0280-6-0-S	-	-	-
NX_0300 2	DUT-0350-6-0-P	DUT-0420-6-0-S	-	-	-

Table 11. Drive suitability for 500 V AC air-cooled drives

500 V AC drive	Filter, IP00 class		500 V AC drive	Filter, IP 21 class	Filter, IP 54 class
NX_0003-0012 5	DUT-0012-6-0	-	NX_0003-0012 5	DUT-0012-6-2-P	DUT-0012-6-5-P
NX_0016-0022 5	DUT-0025-6-0	-	NX_0016-0031 5	DUT-0034-6-2-P	DUT-0034-6-5-P
NX_0031-0045 5	DUT-0055-6-0	-	NX_0038-0045 5	DUT-0055-6-2-P	DUT-0055-6-5-P
NX_0061-0072 5	DUT-0080-6-0	-	NX_0061-0087 5	DUT-0100-6-2-P	DUT-0100-6-5-P
NX_0087-0105 5	DUT-0130-6-0-P	-	NX_0105-0205 5	DUT-0210-6-2-P	DUT-0210-6-5-P
NX_0140-0205 5	DUT-0210-6-0-P	-	-	-	-
NX_0261 5	DUT-0280-6-0-P	DUT-0280-6-0-S	-	-	-
NX_0300 5	DUT-0350-6-0-P	DUT-0420-6-0-S	-	-	-
NX_0385 5	DUT-0420-6-0-P	DUT-0420-6-0-S	-	-	-
NX_0460-0590 5	DUT-0600-6-0-P	DUT-0590-6-0-S	-	-	-
NX_0650-0730 5	DUT-0820-6-0-P	DUT-0820-6-0-S	-	-	-
NX_0820 5	2 x DUT-0420-6-0-P	2 x DUT-0420-6-0-S	-	-	-
NX_0920-1030 5	2 x DUT-0600-6-0-P	2 x DUT-0590-6-0-S	-	-	-
NX_1150 5	DUT-1200-6-0-P	DUT-1250-6-0-S	-	-	-
NX_1300-1450 5	DUT-1500-6-0-P	DUT-1600-6-0-S	-	-	-
NX_1770 - 2150 5	2 x DUT-1200-6-0-P	2 x DUT-1250-6-0-S	-	-	-
NX_2700 5	2 x DUT-1500-6-0-P	2 x DUT-1600-6-0-S	-	-	-

Table 12. Drive suitability for 690 V AC air-cooled drives

690 V AC drive	Filter, IP00 class		690 V AC drive	Filter, IP 21 class	Filter, IP 54 class
NX_0005-0010 6	DUT-0012-6-0	-	NX_0004-0010 6	DUT-0012-6-2-P	DUT-0012-6-5-P
NX_0013-0022 6	DUT-0025-6-0	-	NX_0013-0034 5	DUT-0034-6-2-P	DUT-0034-6-5-P
NX_0027-0052 6	DUT-0055-6-0	-	NX_0027-0052 6	DUT-0055-6-2-P	DUT-0055-6-5-P
NX_0062-0080 6	DUT-0080-6-0	-	NX_0062-0080 6	DUT-0100-6-2-P	DUT-0100-6-5-P
NX_0100-0125 6	DUT-0130-6-0-P	-	NX_0100-0208 6	DUT-0210-6-2-P	DUT-0210-6-5-P
NX_0144-0208 5	DUT-0210-6-0-P	-	-	-	-
NX_0261 6	DUT-0280-6-0-P	DUT-0280-6-0-S	-	-	-
NX_0325 5	DUT-0350-6-0-P	DUT-0420-6-0-S	-	-	-
NX_0385-0416 6	DUT-0420-6-0-P	DUT-0420-6-0-S	-	-	-
NX_0460-0590 6	DUT-0600-6-0-P	DUT-0590-6-0-S	-	-	-
NX_0650 6	2 x DUT-0350-6-0-P	2 x DUT-0420-6-0-S	-	-	-
NX_0750-0820 6	2 x DUT-0420-6-0-P	2 x DUT-0420-6-0-S	-	-	-
NX_0920-1080 6	DUT-1200-6-0-P	DUT-1250-6-0-S	-	-	-
NX_1500 6	2 x DUT-0820-6-0-P	2 x DUT-0820-6-0-S	-	-	-
NX_1900-2250 6	2 x DUT-1200-6-0-P	2 x DUT-1250-6-0-S	-	-	-

Table 13. Drive suitability for 500 V AC liquid-cooled drives

500 V AC drive	Filter, IP00 class		500 V AC drive	Filter, IP 21 class	Filter, IP 54 class
NX_0016-0022 5	DUT-0025-6-0	-	NX_0016-0031 5	DUT-0034-6-2-P	DUT-0034-6-5-P
NX_0031-0045 5	DUT-0055-6-0	-	NX_0038-0045 5	DUT-0055-6-2-P	DUT-0055-6-5-P
NX_0061-0072 5	DUT-0080-6-0	-	NX_0061-0087 5	DUT-0100-6-2-P	DUT-0100-6-5-P
NX_0087-0105 5	DUT-0130-6-0	-	NX_0105-0205 5	DUT-0210-6-2-P	DUT-0210-6-5-P
NX_0140-0205 5	DUT-0210-6-0-P	DUT-0280-6-0-S	-	-	-
NX_0261 5	DUT-0280-6-0-P	DUT-0280-6-0-S	-	-	-
NX_0300 5	DUT-0350-6-0-P	DUT-0420-6-0-S	-	-	-
NX_0385 5	DUT-0420-6-0-P	DUT-0420-6-0-S	-	-	-
NX_0460-0590 5	DUT-0600-6-0-P	DUT-0590-6-0-S	-	-	-
NX_0650-0820 5	DUT-0820-6-0-P	DUT-0820-6-0-S	-	-	-
NX_0920-1150 5	DUT-1200-6-0-P	DUT-1250-6-0-S	-	-	-
NX_1370 5	DUT-1500-6-0-P	DUT-1600-6-0-S	-	-	-
NX_1640 5	2 x DUT-0820-6-0-P	2 x DUT-0820-6-0-S	-	-	-
NX_2060-2300 5	2 x DUT-1200-6-0-P	2 x DUT-1250-6-0-S	-	-	-
NX_2470-2950 5	2 x DUT-1500-6-0-P	2 x DUT-1600-6-0-S	-	-	-
NX_3710-4140 5	4 x DUT-1200-6-0-P	4 x DUT-1250-6-0-S	-	-	-

Table 14. Drive suitability for 690 V AC liquid-cooled drive

690 V AC drive	Filter, IP00 class		690 V AC drive	Filter, IP 21 class	Filter, IP 54 class
NX_0170-208 6	DUT-0210-6-0-P	DUT-0280-6-0-S	NX_0170-208 6	DUT-0210-6-2-P	DUT-0210-6-5-P
NX_0261 6	DUT-0280-6-0-P	DUT-0280-6-0-S	-	-	-
NX_0325 6	DUT-0350-6-0-P	DUT-0420-6-0-S	-	-	-
NX_0385-0416 6	DUT-0420-6-0-P	DUT-0420-6-0-S	-	-	-
NX_0460 6	DUT-0600-6-0-P	DUT-0590-6-0-S	-	-	-
NX_0502-590 6	DUT-0600-6-0-P	DUT-0590-6-0-S	-	-	-
NX_0650-0820 6	DUT-0820-6-0-P	DUT-0820-6-0-S	-	-	-
NX_0920-1180 6	DUT-1200-6-0-P	DUT-1250-6-0-S	-	-	-
NX_1300-1500 6	DUT-1500-6-0-P	DUT-1600-6-0-S	-	-	-
NX_1700-2340 6	2 x DUT-1200-6-0-P	2 x DUT-1250-6-0-S	-	-	-
NX_2700 6	2 x DUT-1500-6-0-P	2 x DUT-1600-6-0-S	-	-	-
NX_3100 6	2 x DUT-2300-6-0-P	2 x DUT-1600-6-0-S	-	-	-

2.2.3 INSTALLATION

The connection of the dU/dt and sine filters is shown in the figure below.

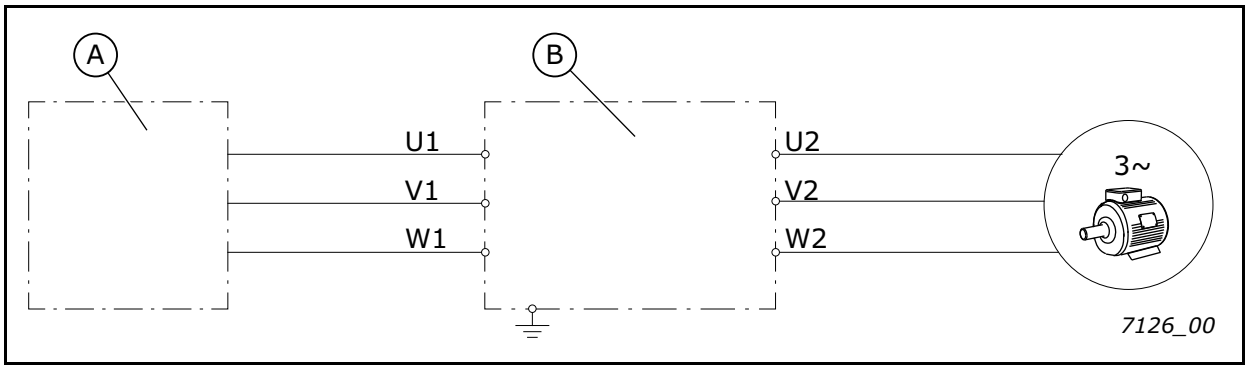

#	Reference	#	Reference
A	AC drive	B	dU/dt or sine filter

Figure 9. Filter connection

NOTE! The maximum motor cable length for P-type dU/dt-filter is 100 m. In case of multiple cables, the length is defined as a total length of the cables. Cabling capacitance and the switching current grow as a cable length function. Therefore there is a risk of filter overheating, when long cabling lengths are used. If the cable length is not sufficient enough, it is recommended to use a filter one size larger or sine filters.

S-type dU/dt filters safe operation area as a function of the switching frequency of the drive and motor cable length is shown in Chapter 3.3. Note that diagrams show values based on pre-defined cable capacitance. The values should be scaled in accordance with the actual capacitance of the cable. In case of multiple cables the capacitance is defined as a sum of the cable capacitances.

NOTE! Cooling of P-type dU/dt filters is based on natural air convection (AN). Therefore, proper ventilation and placement inside the enclosure must be ensured during assembly. Suitability for base or wall mounting is show in Table 17.

The S- type dU/dt filters are forced air cooled and require a 220 V AC power supply for their fans. The filter has a build-in thermal switch, which indicates if the filter temperature has exceeded the safe limits. This NC contact can be wired to the External fault input of the drive - see the wiring schematic in Figure 10.

Check the input parameterization from the relevant drive application manual. If the external fault input is used for other purposes, you can also connect the fault contact in series with the RUN or the RUN ENABLE command - for their terminal assignment see the relevant application manual.

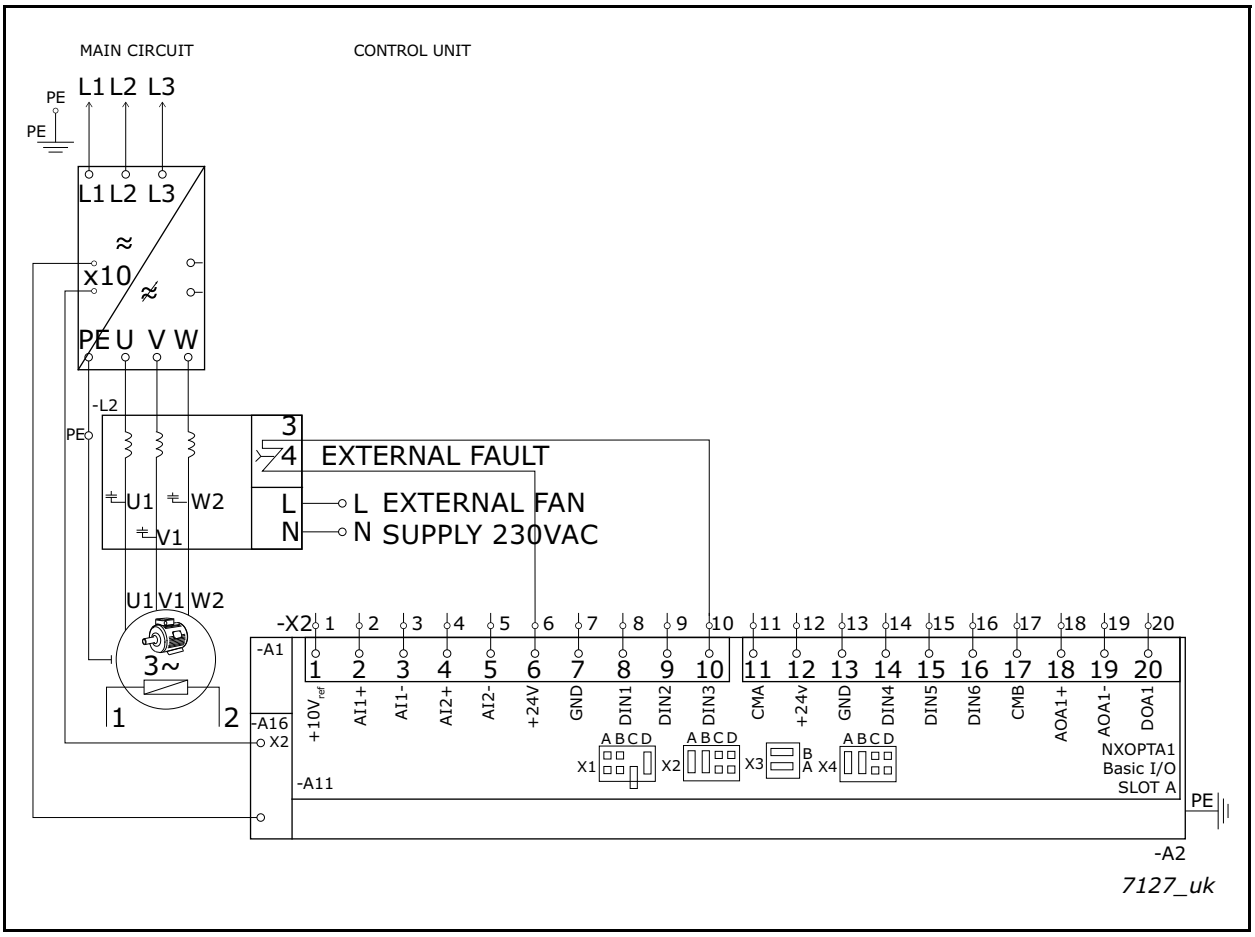

Figure 10. Wiring schematic of the S-type dU/dt filter external fan supply and thermal supervision NC connection

There are enclosure restrictions and details for selection and mounting when using UL listed accessories, IP00 dU/dt-filter models. These restrictions and details should be noted during the filter assembly. For details of drive selection and enclosure restrictions, see Table 15.

- Suitable for use on a circuit capable of delivering not more than 100 000 rms symmetrical amperes, 600 V maximum, or equivalent.
- Use 60/75 C CU wire only or equivalent copper/aluminum busbars.
- Tightening torque and wire range for field wiring terminals are mentioned in the manual or on the wiring diagram.

Table 15. Drive suitability table and details of enclosure restrictions for UL listed accessories dU/dt filters

Filter, IP00 class, UL listed accesories	Compatible VACON® NX drive enclosure sizes	Figures of the enclosure and quantity of dU/dt filters in the same enclosure
DUT-0012-6-0	FR4, FR6	No enclosure restrictions
DUT-0025-6-0	FR4, FR5, FR6	
DUT-0055-6-0	FR5, FR6, FR7	Figures 30, 31, 34 1-2 pcs
DUT-0080-6-0	FR6, FR7, FR8	
DUT-0130-6-0- P-UL	FR7, FR8, FR9, FI9	
DUT-0210-6-0- P-UL	FR7, FR8, FR9, FI9	
DUT-0280-6-0- P-UL	FR8, FR9, FR10, FR11, FR12, FI9, FI10, FI12	Figures 30, 31, 33 1-2 pcs
DUT-0350-6-0- P-UL	FR8, FR9, FR10, FR11, FR12, FI9, FI10, FI12	
DUT-0420-6-0- P-UL	FR9, FR10, FR11, FR12, FI10, FI12	
DUT-0600-6-0- P-UL	FR9, FR10, FR11, FR12, FI10, FI12	
DUT-0820-6-0- P-UL	FR10, FR11, FI13, FI14	Figures 32 and 35, 1 pcs
DUT-1200-6-0- P-UL	FI13, FI14, FR13, FR14	
DUT-1500-6-0- P-UL	FI13, FI14, FR13, FR14	

Illustration figures are shown in Chapter 3.2.

Dimension data

Table 16. dU/dt-filter dimensions IP00 class

Filter type code	Drawing number	Dimensions																	
		A	B	C	D	E	F	G	H	I	J	K	L	M	N	P	Q	R	S
DUT-0012-6-0	70CMC10253	120±2	103±2	155±2	80±2	78±2	-	63±1	6x8	-	-	-	-	-	-	-	-	-	-
DUT-0025-6-0		180±2	125±2	215±2	102±2	120±2	-	80±1	8x11	-	-	-	-	-	-	-	-	-	-
DUT-0055-6-0		205±2	130±2	220±2	130±2	156±2	-	78±1	11x14	-	-	-	-	-	-	-	-	-	-
DUT-0080-6-0		241±2	135±2	265±2	101±2	170±2	-	80±1	10x13	-	-	-	-	-	-	-	-	-	-
DUT-0130-6-0-P		240±2	157±5	304±2	131±2	190±2	109±1	95±1	11x8	-	-	-	-	-	-	-	-	-	-
DUT-0210-6-0-P		240±2	181±5	331±2	151±2	190±2	129±1	115±1	11x8	-	-	-	-	-	-	-	-	-	-
DUT-0280-6-0-P	70CMC10254	300±2	225±2	299±2	165±2	250±2	142±1	120±1	61±2	243±2	200±2	20±0.5	14±0.5	min 45	-	-	-	-	-
DUT-0350-6-0-P		300±2	236±2	299±2	177±2	250±2	154±1	132±1	61±2	243±2	200±2	20±0.5	14±0.5	min 45	-	-	-	-	-
DUT-0420-6-0-P		300±2	228±2	349±2	177±2	250±2	154±1	132±1	64±2	293±2	200±2	20±0.5	14±0.5	min 45	-	-	-	-	-
DUT-0600-6-0-P		300±2	243±2	449±2	192±2	250±2	169±1	147±1	68±2	389±2	200±2	20±0.5	14±0.5	min 45	-	-	-	-	-
DUT-0820-6-0-P		300±2	257±2	499±2	192±2	250±2	169±1	147±1	66±2	443±2	200±2	-	14±0.5	min 55	14±0.5	22±0.5	-	-	-
DUT-1200-6-0-P		420±2	325±2	499±2	253±2	350±2	214±1	196±1	220±2	410±2	280±2	-	14±0.5	min 65	17±0.5	26±0.5	-	-	-
DUT-1500-6-0-P		480±2	358±2	599±2	270±2	425±2	232±1	214±1	290±2	525±2	320±2	-	14±0.5	min 85	-	-	20±0.5	40±0.5	40±0.5
DUT-2300-6-0-P		660±2	381±2	693±2	290±2	580±2	252±1	228±1	136±2	575±2	440±2	-	14±0.5	min 85	-	-	20±0.5	40±0.5	50±0.5
DUT-0280-6-0-S	70CMC10321	max 304	420	335	380	380±1.5	125±1	Ø12	Ø11	350	390±2	290	-	-	-	-	-	-	-
DUT-0420-6-0-S		max 304	470	345	430	400±1.5	125±1	Ø12	Ø11	400	445	300	-	-	-	-	-	-	-
DUT-0590-6-0-S		max 304	470	345	430	400±1.5	125±1	Ø12	Ø11	400	445	300	-	-	-	-	-	-	-
DUT-0820-6-0-S		max 306	665±3	330 (?)	635±2	610±2	125±1	Ø12	Ø13	551.5	625	290	-	-	-	-	-	-	-
DUT-1250-6-0-S	70CMC10322	max 475	745	max 190	680	650±2	150±1	250±1	Ø13	Ø12	68	150	603	26	-	-	-	-	-
DUT-1600-6-0-S		max 475	745	max 190	680	650±2	150±1	250±1	Ø13	Ø12	68	150	603	26	-	-	-	-	-

Detailed dimension drawings are in Chapter 3.1.

Table 17. dU/dt-filter terminal dimension and mounting notifications IP00 class

Filter type code	Drawing number	Connection size		Connection torque (Nm)		Weight (kg)	Mounting	
		Terminal	Grounding	Terminal	Grounding		Base	Wall
DUT-0012-6-0	70CMC10253	0.22 - 4.0 mm²	0.2 - 6.0 mm²	0.6 - 0.8	1.5 - 1.8	2.4	x	x
DUT-0025-6-0		0.5 - 10 mm²	0.5 - 10 mm²	1.5 - 1.8	1.5 - 1.8	8.9	x	x
DUT-0055-6-0		2.5 - 35 mm²	4 - 16 mm²	3.2 - 3.7	2.5 - 3.0	9.1	x	x
DUT-0080-6-0		4 - 70 mm²	4 - 16 mm²	6 - 7	2.5 - 3.0	13.1	x	x
DUT-0130-6-0-P		50 - 95 mm²	M6	6 - 12	8 - 10	22	x	x
DUT-0210-6-0-P		35 - 150 mm²	M8	12 - 20	22 - 25	32	x	x
DUT-0280-6-0-P	70CMC10254	busbar, Ø14 mm	M10	25 - 30	40 - 50	40	x	-
DUT-0350-6-0-P		busbar, Ø14 mm	M10	25 - 30	40 - 50	50	x	-
DUT-0420-6-0-P		busbar, Ø14 mm	M10	25 - 30	40 - 50	52	x	-
DUT-0600-6-0-P		busbar, Ø14 mm	M12	25 - 30	75 - 85	76	x	-
DUT-0820-6-0-P		busbar, Ø14 mm	M12	25 - 30	75 - 85	92	x	-
DUT-1200-6-0-P		busbar, Ø14 mm	M16	25 - 30	190 - 200	151	x	-
DUT-1500-6-0-P		busbar, Ø14 mm	M16	25 - 30	190 - 200	190	x	-
DUT-2300-6-0-P		busbar, Ø14 mm	M16	25 - 30	190 - 200	420	x	-
DUT-0280-6-0-S	70CMC10321	busbar, Ø11 mm	-	-	-	37	-	-
DUT-0420-6-0-S		busbar, Ø11 mm	-	-	-	50	-	-
DUT-0590-6-0-S		busbar, Ø11 mm	-	-	-	50	-	-
DUT-0820-6-0-S		busbar, Ø13 mm	-	-	-	90	-	-
DUT-1250-6-0-S	70CMC10322	busbar, Ø13 mm	-	-	-	95	-	-
DUT-1600-6-0-S		busbar, Ø13 mm	-	-	-	95	-	-

Detailed dimension drawings are in Chapter 3.1.

Table 18. dU/dt-filter dimensions IP21 and P54 class

Filter type code	Drawing number	Dimensions																	
		A	B	C	D	E	F	G	H	I	J	K	L	M	N	P	Q	R	S
DUT-0012-6-2-P	70CMC10255	195±2	265±2	145±2	235±2	170±1	250±1	6,5±0,5	21	-	-	-	-	-	-	-	-	-	-
DUT-0034-6-2-P		195±2	265±2	145±2	235±2	170±1	250±1	6,5±0,5	21	-	-	-	-	-	-	-	-	-	-
DUT-0055-6-2-P		237±2	330±2	170±2	300±2	175±1	318±1	6,5±0,5	29	-	-	-	-	-	-	-	-	-	-
DUT-0100-6-2-P		289±2	430±2	205±2	360±2	228±1	408±1	9±0,5	53	-	-	-	-	-	-	-	-	-	-
DUT-0210-6-2-P		480±2	540±2	235±2	470±2	400±2	518±1	9±0,5	2x53	-	-	-	-	-	-	-	-	-	-
DUT-0012-6-5-P	70CMC10256	150±2	206+4/-2	132±2	150±2	180±2	80±1	9±0,5	11-16	91±2	50±2	~175	-	-	-	-	-	-	-
DUT-0034-6-5-P		200±2	256+4/-2	133±2	200±2	230±2	150±1	9±0,5	19-27	87±2	60±2	~240	-	-	-	-	-	-	-
DUT-0055-6-5-P		300±2	356+4/-2	215±2	300±2	330±2	250±2	9±0,5	19-27	150±2	80±2	~340	-	-	-	-	-	-	-
DUT-0100-6-5-P		600±2	456+4/-2	215±2	400±2	431±2	550±2	9±0,5	24-35	100±2	90±2	~645	-	-	-	-	-	-	-
DUT-0210-6-5-P	70CMC10257	440±2	610±2	460±2	520±2	240±2	400±2	11±0,5	38-48	340±2	120±2	30	15	-	-	-	-	-	-

Table 19. dU/dt-filter terminal dimension and mounting notifications IP21 and IP54 class

Filter type code	Drawing number	Connection size		Connection torque (Nm)		Weight (kg)	Mounting	
		Terminal	Grounding	Terminal	Grounding		Base	Wall
DUT-0012-6-2-P	70CMC10255	M5	M5	3 -5	3 - 5	6.4	-	x
DUT-0034-6-2-P		M5	M5	3 - 5	3 - 5	8.6	-	x
DUT-0055-6-2-P		M6	M6	8 - 10	8 - 10	13.7	-	x
DUT-0100-6-2-P		M6	M6	8 - 10	8 - 10	23	-	x
DUT-0210-6-2-P		M8	M8	20 - 25	20 - 25	42	-	x
DUT-0012-6-5-P	70CMC10256	0.22 - 4.0 mm²	0.2 - 6.0 mm²	0.5 - 0.8	0.5 - 1.0	5.5	x	x
DUT-0034-6-5-P		2.5 - 16 mm²	0.5 - 16 mm²	2.0 - 4.0	1.2 - 1.4	11	x	x
DUT-0055-6-5-P		2.5 - 35 mm²	2.5 - 16 mm²	2.0 - 5.0	2.5 - 16	26	x	x
DUT-0100-6-5-P		16 - 70 mm²	16 - 70 mm²	6 - 7	6 - 7	35	x	x
DUT-0210-6-5-P	70CMC10257	35 - 150 mm²	M8	12 - 20	20 - 25	75	x	-

2.3 Sine filters

2.3.1 General

If the motor cannot withstand any additional voltage stresses, or the dU/dt filter does not decrease them sufficiently, a sine filter can be used. The sine filter is also an LC filter, but with resonance frequency < 50% of the switching frequency, i.e. about 600 Hz for the 690 V drives and about 1.2 kHz for the 500 V drives. Hence there are two different ranges. The filter removes the carrier frequency, leaving only the output frequency and thus eliminating all voltage stress on the motor.

At full load the voltage drop is about 30 V - a significant part of the available voltage. This has to be taken into account when the motor sizing is done. The voltage drop can be partly compensated by decreasing the field weakening point level; feeding the motor the correct voltage up to this point, but the motor will not receive full voltage at nominal speed. The voltage drop can also be compensated by using an active front end drive, increasing the DC-link voltage.

NOTE! The sine filters are designed for a switching frequency of 1.5 kHz for 690 V AC and 3.6 kHz for 500 V AC, which corresponds to the nominal switching frequency of VACON® NX drives. It is safe to increase the switching frequency, but IT IS NOT ALLOWED TO DECREASE THIS VALUE below nominal, as there is a risk of overheating.

The VACON® NX drive has a switching frequency foldback feature on overtemperature for the drive. This has to be disabled for 500 V drives when sine filters are used. See the drive application manual.

NOTE! The sine filters are designed for a maximum output frequency of 70 Hz. If this value is exceeded there is a risk of overheating. If higher output frequency is requested, the drive output current must be decreased. De-rating for motor frequency for different filter types is shown in Chapter 3.4.

The filters are designed in such a way, that their nominal current is higher than the nominal current of the drive. The filters are thermally designed for the same overload cycle as the drives.

2.3.2 SINE FILTER TYPES

Table 20. Sine filter type

Filter type code	Manufacturer's part code	Rated voltage, 3~[V AC]	Nominal current at 40°C [A]	Nominal current at 50°C [A]	Power loss at 40°C [W]	IP class
SIN-0010-5-0-P	921-937	500	10	8.8	100	IP00
SIN-0018-5-0-P	927-939	500	18	16	140	IP00
SIN-0032-5-0-P	940-972	500	32	28	170	IP00
SIN-0048-5-0-P	943-991	500	48	42	190	IP00
SIN-0075-5-0-P	957-962	500	75	66	350	IP00
SIN-0110-5-0-P	969-941	500	110	97	550	IP00
SIN-0180-5-0-P	970-943	500	180	155	600	IP00
SIN-0270-5-0-P	970-940	500	270	235	940	IP00
SIN-0410-5-0-P	978-929	500	410	360	1200	IP00
SIN-0600-5-0-P	984-962	500	600	525	1500	IP00
SIN-0840-5-0-P	984-960	500	840	740	1800	IP00
SIN-1160-5-0-P	998-926	500	1160	1020	2400	IP00
SIN-1480-5-0-P	999-924	500	1480	1302	3300	IP00
SIN-0005-6-0-P	918-1007	690	4.5	4	50	IP00
SIN-0008-6-0-P	921-942	690	7.5	6.6	80	IP00
SIN-0014-6-0-P	927-943	690	14	12	140	IP00
SIN-0023-6-0-P	941-922	690	23	20	180	IP00
SIN-0035-6-0-P	945-1021	690	35	31	210	IP00
SIN-0052-6-0-P	957-966	690	52	45	350	IP00
SIN-0085-6-0-P	969-940	690	85	75	540	IP00
SIN-0122-6-0-P	970-944	690	122	107	600	IP00
SIN-0185-6-0-P	978-938	690	185	160	820	IP00
SIN-0287-6-0-P	983-923N	690	287	250	1100	IP00
SIN-0390-6-0-P	984-963N	690	390	340	1410	IP00
SIN-0460-6-0-P	984-964N	690	460	400	1550	IP00
SIN-0620-6-0-P	998-927N	690	620	545	2000	IP00
SIN-0780-6-0-P	998-928N	690	780	680	2700	IP00
SIN-0920-6-0-P	999-925N	690	920	810	2900	IP00
SIN-1180-6-0-P	999-926N	690	1180	1040	3150	IP00
SIN-0004-5-5-P	917-966	500	4.3	3.8	60	IP54
SIN-0008-5-5-P	918-1001	500	7.6	6.7	75	IP54
SIN-0012-5-5-P	926-919	500	12	10.5	110	IP54
SIN-0016-5-5-P	640-974	500	16	14	125	IP54
SIN-0023-5-5-P	942-1066	500	23	20	140	IP54
SIN-0032-5-5-P	945-1022	500	32	28	165	IP54
SIN-0038-5-5-P	956-995	500	38	33	220	IP54
SIN-0046-5-5-P	958-943	500	46	40	270	IP54
SIN-0055-5-5-P	968-948	500	55	48	315	IP54
SIN-0061-5-5-P	969-937	500	61	53	350	IP54
SIN-0072-5-5-P	969-938	500	72	63	360	IP54

The available IP ratings are IP00 and IP54.

Suitability

Table 21. Drive suitability table for 200 V AC air-cooled drives

200 V AC drive	Filter, IP00 class	200 V AC drive	Filter, IP 54 class
NX_ 0003-0008 2	SIN-0010-5-0-P	NX_ 0003 2	SIN-0004-5-5-P
NX_0011-0017 2	SIN-0018-5-0-P	NX_0004-0008 2	SIN-0008-5-5-P
NX_0025-0031 2	SIN-0032-5-0-P	NX_0011-0012 2	SIN-0012-5-5-P
NX_0048 2	SIN-0048-5-0-P	NX_0017 2	SIN-0023-5-5-P
NX_0061-0075 2	SIN-0075-5-0-P	NX_0025-0031 2	SIN-0032-5-5-P
NX_0075-0088 2	SIN-0110-5-0-P	NX_0048-0061 2	SIN-0061-5-5-P
NX_0114-0170 2	SIN-0180-5-0-P	-	-
NX_0205- 0270 2	SIN-0270-5-0-P	-	-
NX_0300 2	SIN-0410-5-0-P	-	-

Table 22. Drive suitability table for 500 V AC and 690 V AC air-cooled drives

500 V AC drive	Filter, IP00 class	500 V AC drive	Filter, IP 54 class	690 V AC drive	Filter, IP00 class
NX_0003-0009 5	SIN-0010-5-0-P	NX_0003 5	SIN-0004-5-5-P	NX_0004-0005 6	SIN-0005-6-0-P
NX_0012-0016 5	SIN-0018-5-0-P	NX_0004-0007 5	SIN-0008-5-5-P	NX_0007 6	SIN-0008-6-0-P
NX_0022-0031 5	SIN-0032-5-0-P	NX_0009-0012 5	SIN-0012-5-5-P	NX_0010-0013 6	SIN-0014-6-0-P
NX_0038-0045 5	SIN-0048-5-0-P	NX_0016 5	SIN-0016-5-5-P	NX_0018-0022 6	SIN-0023-6-0-P
NX_0061-0072 5	SIN-0075-5-0-P	NX_0022 5	SIN-0023-5-5-P	NX_0027-0034 6	SIN-0035-6-0-P
NX_0087-0105 5	SIN-0110-5-0-P	NX_0031 5	SIN-0032-5-5-P	NX_0041-0052 6	SIN-0052-6-0-P
NX_0140-0168 5	SIN-0180-5-0-P	NX_0038 5	SIN-0038-5-5-P	NX_0062-0080 6	SIN-0085-6-0-P
NX_0205-0261 5	SIN-0270-5-0-P	NX_0045 5	SIN-0046-5-5-P	NX_0100 6	SIN-0122-6-0-P
NX_0300-0385 5	SIN-0410-5-0-P	NX_0061 5	SIN-0061-5-5-P	NX_0125-0170 6	SIN-0185-6-0-P
NX_0460-0590 5	SIN-0600-5-0-P	NX_0072 5	SIN-0072-5-5-P	NX_0208-0261 6	SIN-0287-6-0-P
NX_0650-0730 5	SIN-0840-5-0-P	-	-	NX_0325-0385 6	SIN-0390-6-0-P
NX_0820 5	2xSIN-0410-5-0-P	-	-	NX_0416-0460 6	SIN-0460-6-0-P
NX_0920-1030 5	2xSIN-0600-5-0-P	-	-	NX_0502-0590	SIN-0620-6-0-P
NX_1150 5	SIN-1160-5-0-P	-	-	NX_0650-0750 6	2xSIN-0390-6-0-P
NX_1300-1450 5	SIN-1480-5-0-P	-	-	NX_0820 6	2xSIN-0460-6-0-P
NX_1770 5	2xSIN-1160-5-0-P	-	-	NX_0920 6	SIN-0920-6-0-P
NX_2150 5	2xSIN-1480-5-0-P	-	-	NX_1030-1180 6	SIN-1180-6-0-P
NX_2700 5	2xSIN-1480-5-0-P	-	-	NX_1500 6	2xSIN-0920-6-0-P
-	-	-	-	NX_1900 6	2xSIN-1180-6-0-P
-	-	-	-	NX_2250 6	2xSIN-1180-6-0-P

Table 23. Drive suitability table for 500 V AC and 690 V AC liquid-cooled drives

500 V AC drive	Filter, IP00 class	500 V AC drive	Filter, IP 54 class	690 V AC drive	Filter, IP00 class
NX_0016 5	SIN-0018-5-0-P	NX_0016 5	SIN-0016-5-5-P	NX_0170 6	SIN-0185-6-0-P
NX_0022-0031 5	SIN-0032-5-0-P	NX_0022 5	SIN-0023-5-5-P	NX_0208-0261 6	SIN-0287-6-0-P
NX_0038-0045 5	SIN-0048-5-0-P	NX_0031 5	SIN-0032-5-5-P	NX_0325-0385 6	SIN-0390-6-0-P
NX_0061-0072 5	SIN-0075-5-0-P	NX_0038 5	SIN-0038-5-5-P	NX_0416-0460 6	SIN-0460-6-0-P
NX_0087-00105 5	SIN-0110-5-0-P	NX_0045 5	SIN-0046-5-5-P	NX_0502-0590 6	SIN-0620-6-0-P
NX_0140-0168 5	SIN-0180-5-0-P	NX_0061 5	SIN-0061-5-5-P	NX_0650-0750 6	SIN-0780-6-0-P
NX_0205-0261 5	SIN-0270-5-0-P	NX_0072 5	SIN-0072-5-5-P	NX_0820-0920 6	SIN-0920-6-0-P
NX_0300-0385 5	SIN-0410-5-0-P	-	-	NX_1030-1180 6	SIN-1180-6-0-P
NX_0460-0590 5	SIN-0600-5-0-P	-	-	NX_1300-1500 6	2xSIN-0780-6-0-P
NX_0650-0820 5	SIN-0840-5-0-P	-	-	NX_1700-2340 6	2xSIN-1180-6-0-P
NX_0920-1150 5	SIN-1160-5-0-P	-	-	NX_2700-3100 6	4xSIN-0920-6-0-P
NX_1370 5	SIN-1480-5-0-P	-	-	-	-
NX_1640 5	2xSIN-0840-5-0-P	-	-	-	-
NX_2060 5	2xSIN-1160-5-0-P	-	-	-	-
NX_2300-2470 5	2xSIN-1480-5-0-P	-	-	-	-
NX_2950 5	4xSIN-0840-5-0-P	-	-	-	-
NX_3710-4140 5	4xSIN-1160-5-0-P	-	-	-	-

2.3.3 INSTALLATION

The sine filter connection is shown in Figure 9 on page 22.

NOTE! The maximum motor cable length for the sine filter is 300 m. If a longer cable is used, it is recommended to select one current class higher sine-filter type to prevent overheating.

NOTE! Cooling of the sine filters is based on natural air convection (AN). Therefore a proper ventilation and placement inside the enclosure must be ensured during assembly. Suitability for base or wall mounting is shown in Table 26.

Dimension data

Table 24. Sine filter dimensions 1/2

Filter type code	Drawing number	Dimensions																						
		A	B	C	D	E	F	G	H	I	J	K	L	M	N	P	Q	R	S	T	U	V	W	X
SIN-0004-5-5-P	70CMC10256	200±2	256+4/-2	133±2	200±2	230±2	150±2	9±0,5	9-13	95±2	40±2	~230	-	-	-	-	-	-	-	-	-	-	-	-
SIN-0008-5-5-P		200±2	256+4/-2	133±2	200±2	230±2	150±2	9±0,5	9-13	95±2	40±2	~230	-	-	-	-	-	-	-	-	-	-	-	-
SIN-0012-5-5-P		300±2	356+4/-2	215±2	300±2	330±2	250±2	9±0,5	14-21	160±2	60±2	~340	-	-	-	-	-	-	-	-	-	-	-	-
SIN-0016-5-5-P		300±2	356+4/-2	215±2	300±2	330±2	250±2	9±0,5	14-21	150±2	60±2	~340	-	-	-	-	-	-	-	-	-	-	-	-
SIN-0023-5-5-P		300±2	356+4/-2	215±2	300±2	330±2	250±2	9±0,5	14-21	150±2	60±2	~340	-	-	-	-	-	-	-	-	-	-	-	-
SIN-0032-5-5-P		300±2	356+4/-2	215±2	300±2	330±2	250±2	9±0,5	9-27	150±2	60±2	~340	-	-	-	-	-	-	-	-	-	-	-	-
SIN-0038-5-5-P	70CMC10257	480±2	520±2	480±2	460±2	240±2	440±2	11±0,5	19-27	380±2	70±2	30	15	150±2	-	-	-	-	-	-	-	-	-	-
SIN-0046-5-5-P		480±2	520±2	480±2	460±2	240±2	440±2	11±0,5	19-27	380±2	70±2	30	15	150±2	-	-	-	-	-	-	-	-	-	-
SIN-0055-5-5-P		560±2	660±2	590±2	600±2	310±2	520±2	11±0,5	19-27	500±2	90±2	30	15	135±2	-	-	-	-	-	-	-	-	-	-
SIN-0061-5-5-P		560±2	660±2	590±2	600±2	310±2	520±2	11±0,5	24-35	500±2	90±2	30	15	135±2	-	-	-	-	-	-	-	-	-	-
SIN-0072-5-5-P		560±2	660±2	590±2	600±2	310±2	520±2	11±0,5	24-35	500±2	90±2	30	15	135±2	-	-	-	-	-	-	-	-	-	-
SIN-0010-5-0-P	70CMC10330	190±2	144±5	211±2	82±2	170±2	62±1	54±1	8x12	-	-	-	-	-	-	-	-	-	-	-	-	-	-	-
SIN-0018-5-0-P		210±2	171±5	236±2	107±2	180±2	85±1	77±1	8x12	-	-	-	-	-	-	-	-	-	-	-	-	-	-	-
SIN-0032-5-0-P		240±2	182±5	271±2	121±2	190±2	99±1	85±1	11x15	-	-	-	-	-	-	-	-	-	-	-	-	-	-	-
SIN-0048-5-0-P		240±2	205±2	270±2	141±2	190±2	119±2	105±2	11x18	-	-	-	-	-	-	-	-	-	-	-	-	-	-	-
SIN-0075-5-0-P		300±2	229±5	330±2	165±2	250±2	142±2	120±2	11x15	-	-	-	-	-	-	-	-	-	-	-	-	-	-	-
SIN-0110-5-0-P		360±2	290±5	452±2	178±2	300±2	156±2	128±2	11x23	-	-	-	-	-	-	-	-	-	-	-	-	-	-	-
SIN-0180-5-0-P		360±2	304±5	467±2	193±2	300±2	171±2	143±2	11x23	-	-	-	-	-	-	-	-	-	-	-	-	-	-	-
SIN-0005-6-0-P		155±2	145±5	180±2	91±2	130±2	75±1	67±1	8x12	-	-	-	-	-	-	-	-	-	-	-	-	-	-	-
SIN-0008-6-0-P		190±2	144±5	211±2	82±2	170±2	62±1	54±1	8x12	-	-	-	-	-	-	-	-	-	-	-	-	-	-	-
SIN-0014-6-0-P		210±2	170±5	238±2	107±2	180±2	85±1	77±1	-	-	-	-	-	-	-	-	-	-	-	-	-	-	-	-
SIN-0023-6-0-P		240±2	198±5	260±2	131±2	190±2	109±2	95±2	11x15	-	-	-	-	-	-	-	-	-	-	-	-	-	-	-
SIN-0035-6-0-P		240±2	232±2	268±2	151±2	190±2	129±2	115±2	11x15	-	-	-	-	-	-	-	-	-	-	-	-	-	-	-
SIN-0052-6-0-P		300±2	265±5	323±2	165±2	250±2	142±2	120±2	11x22	-	-	-	-	-	-	-	-	-	-	-	-	-	-	-
SIN-0085-6-0-P		360±2	310±5	455±2	178±2	300±2	156±2	128±2	11x23	-	-	-	-	-	-	-	-	-	-	-	-	-	-	-
SIN-0122-6-0-P		360±2	300±5	469±2	193±2	300±2	171±2	143±2	11x23	-	-	-	-	-	-	-	-	-	-	-	-	-	-	-
SIN-0185-6-0-P		420±2	380±5	514±2	253±2	300±2	214±2	196±2	11x20	-	-	-	-	-	-	-	-	-	-	-	-	-	-	-

Local contacts: https://www.danfoss.com/en/contact-us/contacts-list/

Table 25. Sine filter dimensions 2/2

Filter type code	Drawing number	Dimensions											
		A	B	C	D	E	F	G	H	I	J	K	L
SIN-0270-5-0-P	70CMC10331	360±2	330±2	500±2	193±2	300±2	171±2	143±2	11±0,5	475±2	-	240±2	319±2
SIN-0410-5-0-P		420±2	380±2	525±2	253±2	350±2	214±2	196±2	11±0,5	500±2	-	280±2	371±2
SIN-0600-5-0-P		480±2	445±2	492±2	300±2	425±2	262±2	244±2	13±0,5	475±2	515±2	320±2	399±2
SIN-0840-5-0-P		480±2	520±2	630±2	300±2	425±2	262±2	244±2	13±0,5	575±2	-	320±2	440±2
SIN-1160-5-0-P		660±2	510±2	675±2	290±2	575±2	252±2	188±2	18±0,5	700±2	-	440±2	417±2
SIN-1480-5-0-P		660±2	550±2	750±2	320±2	575±2	282±2	218±2	18±0,5	700±2	-	440±2	527±2
SIN-0287-6-0-P		480±2	400±2	520±2	270±2	425±2	232±2	214±2	13	500±2	-	320±2	366±2
SIN-0390-6-0-P		480±2	420±2	525±2	300±2	425±2	262±2	244±2	13	525±2	-	320±2	400±2
SIN-0460-6-0-P		480±2	420±2	580±2	300±2	425±2	262±2	244±2	13	575±2	-	320±2	398±2
SIN-0620-6-0-P		660±2	430±2	600±2	290±2	575±2	252±2	208±2	18	625±2	-	440±2	404±2
SIN-0780-6-0-P		660±2	450±2	640±2	300±2	575±2	262±2	198±2	18	625±2	-	440±2	450±2
SIN-0920-6-0-P		660±2	540±2	650±2	330±2	575±2	292±2	248±2	18	625±2	-	440±2	479±2
SIN-1180-6-0-P		660±2	590±2	681±2	350±2	575±2	312±2	268±2	18	725±2	-	440±2	498±2

Filter type code	Drawing number	Dimensions											
		M	N	P	Q	R	S	T	U	V	W	X	
SIN-0270-5-0-P	70CMC10331	275±2	390±2	min 45	14±0,5	20±0,5	-	-	-	-	-	-	
SIN-0410-5-0-P		343±2	416±2	min 45	14±0,5	20±0,5	-	-	-	-	-	-	
SIN-0600-5-0-P		366±2	383±2	min 45	14±0,5	20±0,5	-	-	-	-	-	-	
SIN-0840-5-0-P		371±2	480±2	min 85	14±0,5	-	20±0,5	40±0,5	-	-	-	-	
SIN-1160-5-0-P		367±2	542±2	min 65	14±0,5	-	-	-	26±0,5	43±0,5	-	-	
SIN-1480-5-0-P		447±2	585±2	min 85	14±0,5	-	-	-	-	-	40±0,5	60±0,5	
SIN-0287-6-0-P		340±2	413±2	min 45	14	20	-	-	-	-	-	-	
SIN-0390-6-0-P		372±2	443±2	min 45	14	20	-	-	-	-	-	-	
SIN-0460-6-0-P		368±2	471±2	min 45	14	20	-	-	-	-	-	-	
SIN-0620-6-0-P		367±2	491±2	min 45	14	20	-	-	-	-	-	-	
SIN-0780-6-0-P		380±2	490±2	min 85	14	-	20	40	-	-	-	-	
SIN-0920-6-0-P		316±2	500±2	min 85	14	-	20	40	-	-	-	-	
SIN-1180-6-0-P		445±2	551±2	min 65	14	-	-	-	26	43	-	-	

Table 26. Sine-filter terminal dimension and mounting notifications

Filter type code	Drawing number	Connection size		Connection torque (Nm)		Weight (kg)	Mounting	
		Terminal	Grounding	Terminal	Grounding		Base	Wall
SIN-0004-5-5-P	70CMC10256	0.22 - 4.0 mm²	0.2 - 6.0 mm²	0.5 - 0.8	0.5 - 1.0	9.5	x	x
SIN-0008-5-5-P		0.22 - 4.0 mm²	0.2 - 6.0 mm²	0.5 - 0.8	0.5 - 1.0	11.2	x	x
SIN-0012-5-5-P		0.5 - 10 mm²	0.2 - 6.0 mm²	1.5 - 1.8	0.5 - 1.0	23.2	x	x
SIN-0016-5-5-P		0.5 - 10 mm²	0.2 - 10 mm²	1.5 - 1.8	1.2 - 2.0	28.7	x	x
SIN-0023-5-5-P		0.5 - 10 mm²	0.2 - 10 mm²	1.5 - 1.8	1.2 - 2.0	34.2	x	x
SIN-0032-5-5-P		2.5 - 35 mm²	2.5 - 16 mm²	2.5 - 5.0	2.5 - 5.0	37	x	x
SIN-0038-5-5-P	70CMC10257	2.5 - 35 mm²	2.5 - 35 mm²	2.8 - 3.0	2.0 - 5.0	60	x	-
SIN-0046-5-5-P		16 - 50 mm²	2.5 - 35 mm²	2.5 - 5.0	2.0 - 5.0	75	x	-
SIN-0055-5-5-P		16 - 70 mm²	16 - 70 mm²	6.0 - 7.0	6.0 - 7.0	95	x	-
SIN-0061-5-5-P		16 - 70 mm²	16 - 70 mm²	6.0 - 7.0	6.0 - 7.0	100	x	-
SIN-0072-5-5-P		16 - 70 mm²	16 - 70 mm²	6.0 - 7.0	6.0 - 7.0	110	x	-
SIN-0010-5-0-P	70CMC10330	0.2 - 4.0 mm²	0.2 - 6.0 mm²	0.6 - 0.8	0.5 - 1.0	10	x	x
SIN-0018-5-0-P		0.5 - 10 mm²	0.2 - 10 mm²	1.5 - 1.8	1.5 - 1.8	12.5	x	x
SIN-0032-5-0-P		1.0 - 16 mm²	4 - 16 mm²	2.5 - 3.0	1.5 - 1.8	19	x	x
SIN-0048-5-0-P		2.5 - 35 mm²	4 - 16 mm²	2.5 - 5.0	1.5 - 1.8	24	x	x
SIN-0075-5-0-P		2.5 - 35 mm²	4 - 16 mm²	2.5 - 5.0	1.5 - 1.8	48	x	-
SIN-0110-5-0-P		16 - 70 mm²	M8	6.0 - 7.0	20 - 25	71.5	x	-
SIN-0180-5-0-P		25 - 95 mm²	M8	6.0 - 12	20 - 25	90.5	x	-
SIN-0005-6-0-P		0.22 - 4.0 mm²	0.2 - 6.0 mm²	0.5 - 0.8	0.5 - 1.0	5.9	x	x
SIN-0008-6-0-P		0.22 - 4.0 mm²	0.2 - 6.0 mm²	0.5 - 0.8	0.5 - 1.0	7.7	x	x
SIN-0014-6-0-P		0.5 - 10 mm²	0.2 - 6.0 mm²	1.5 - 1.8	1.5 - 1.8	13.5	x	x
SIN-0023-6-0-P		0.5 - 10 mm²	0.5 - 10 mm²	1.5 - 1.8	1.5 - 1.8	19.5	x	x
SIN-0035-6-0-P		2.5 - 16 mm²	4 - 16 mm²	2.0 - 4.0	1.5 - 1.8	28	x	x
SIN-0052-6-0-P		2.5 - 35 mm²	M6	2.5 - 5.0	8 - 10	45	x	-
SIN-0085-6-0-P		16 - 50 mm²	M6	2.5 - 5.0	9	77	x	-
SIN-0122-6-0-P		25 - 95 mm²	M6	6.0 - 12	8 - 10	97	x	-
SIN-0185-6-0-P		25 - 95 mm²	M6	6.0 - 12	20 - 25	158	x	-
SIN-0270-5-0-P	70CMC10331	busbar, Ø14 hole	M10	25 - 30	40 - 50	122	x	-
SIN-0410-5-0-P		busbar, Ø14 hole	M12	25 - 30	75 - 85	190	x	-
SIN-0600-5-0-P		busbar, Ø14 hole	M12	25 - 30	75 - 85	220	x	-
SIN-0840-5-0-P		busbar, Ø14 hole	M12	25 - 30	75 - 85	300	x	-
SIN-1160-5-0-P		busbar, Ø14 hole	M16	25 - 30	190 - 200	420	x	-
SIN-1480-5-0-P		busbar, Ø14 hole	M16	25 - 30	190 - 200	500	x	-
SIN-0287-6-0-P		busbar, Ø14 hole	M12 x 30	30	75	190	x	-
SIN-0390-6-0-P		busbar, Ø14 hole	M12 x 30	30	75	260	x	-
SIN-0460-6-0-P		busbar, Ø14 hole	M12 x 30	30	75	270	x	-
SIN-0620-6-0-P		busbar, Ø14 hole	M12 x 30	30	75	360	x	-
SIN-0780-6-0-P		busbar, Ø14 hole	M12 x 30	25-30	75-85	420	x	-
SIN-0920-6-0-P		busbar, Ø14 hole	M16 x 40	30	190	510	x	-
SIN-1180-6-0-P		busbar, Ø14 hole	M16 x 40	30	190	690	x	-

Detailed dimension drawings in Chapter 3.1.

3. DRAWINGS AND DIAGRAMS

3.1 DIMENSION DRAWINGS

3.1.1 RFI FOOTPRINT FILTERS

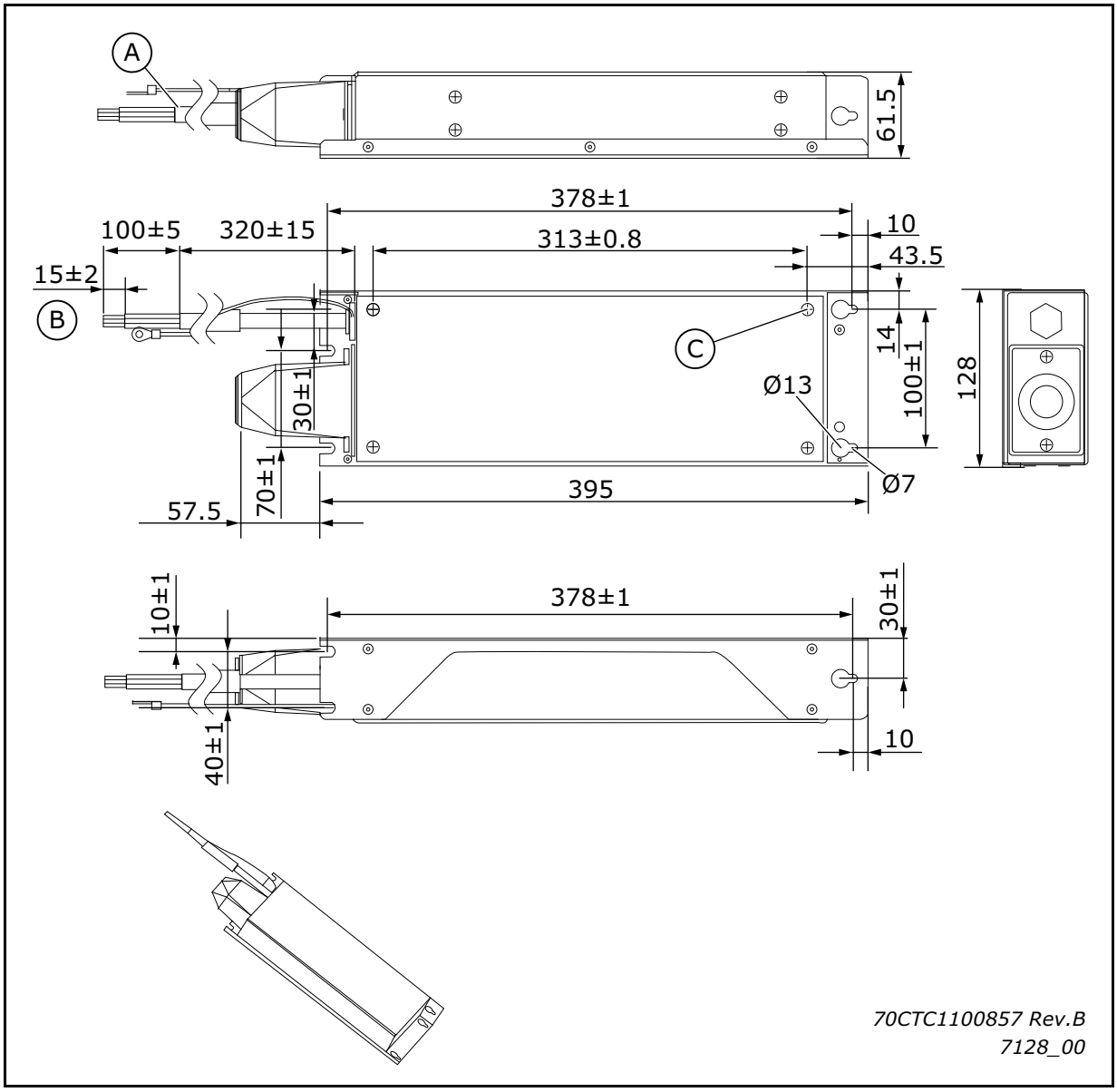

#	Reference	#	Reference
A	Wire 4x2.5 mm^2	B	Line connector; Minimum 5 mm^2, Maximum 16 (solid 25) mm^2 Stripping length 16 mm Tightening torque 2 - 2.3 Nm
C	Maximum screw length for AC drive mounting; M6x16		

Figure 11. 70CTC1100857 Rev. B enclosure size 4

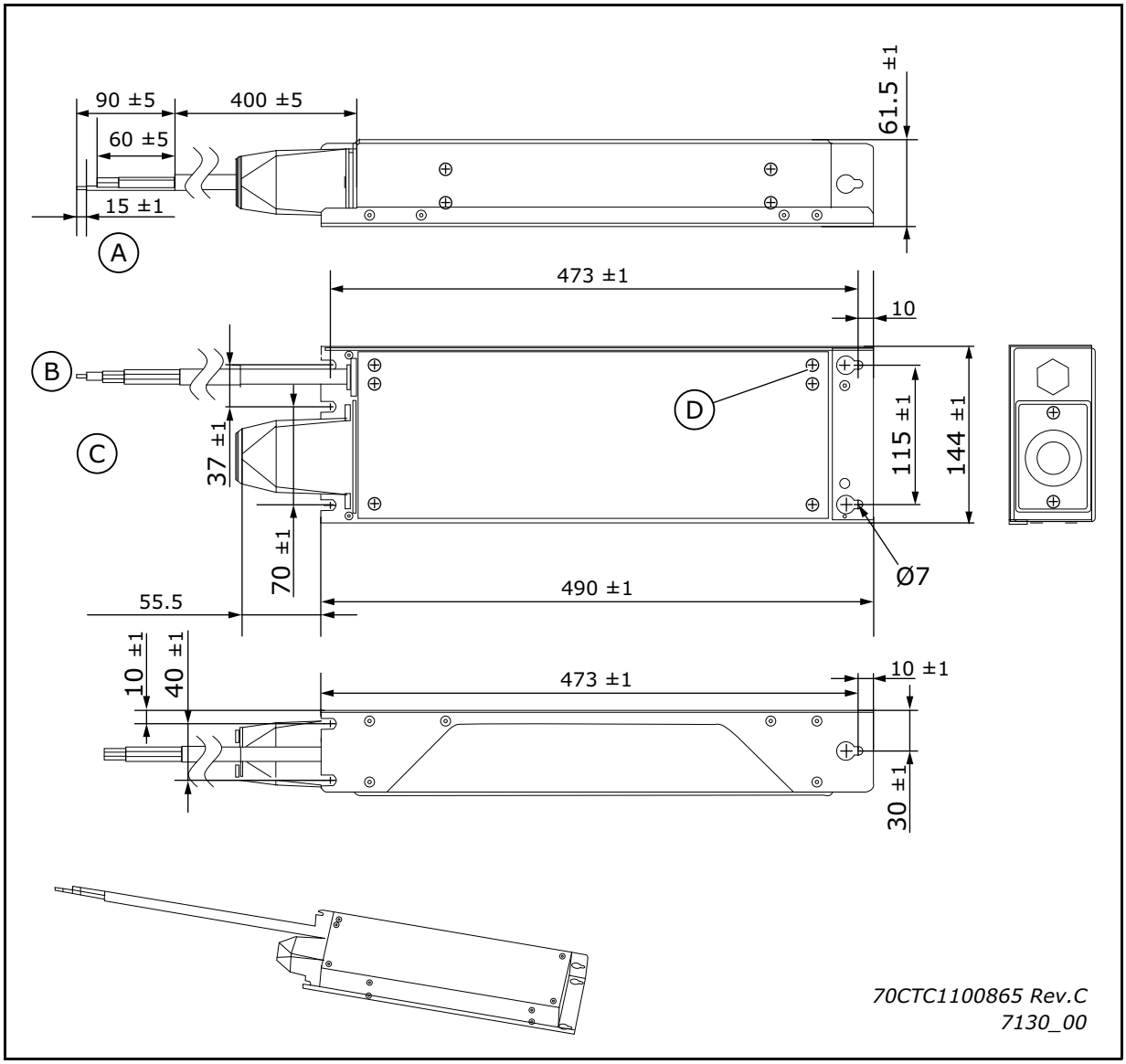

#	Reference	#	Reference
A	Stripping for all wires Cable 4x10 mm^2	B	Load
C	Line connector; Minimum 0.5 mm^2, Maximum 16 (solid 25) mm^2 Stripping length 16 mm Tightening torque 2 - 2.3 Nm	D	Maximum screw length for AC drive mounting; M6x16

Figure 12. 70CTC1100865 Rev. C enclosure size 5

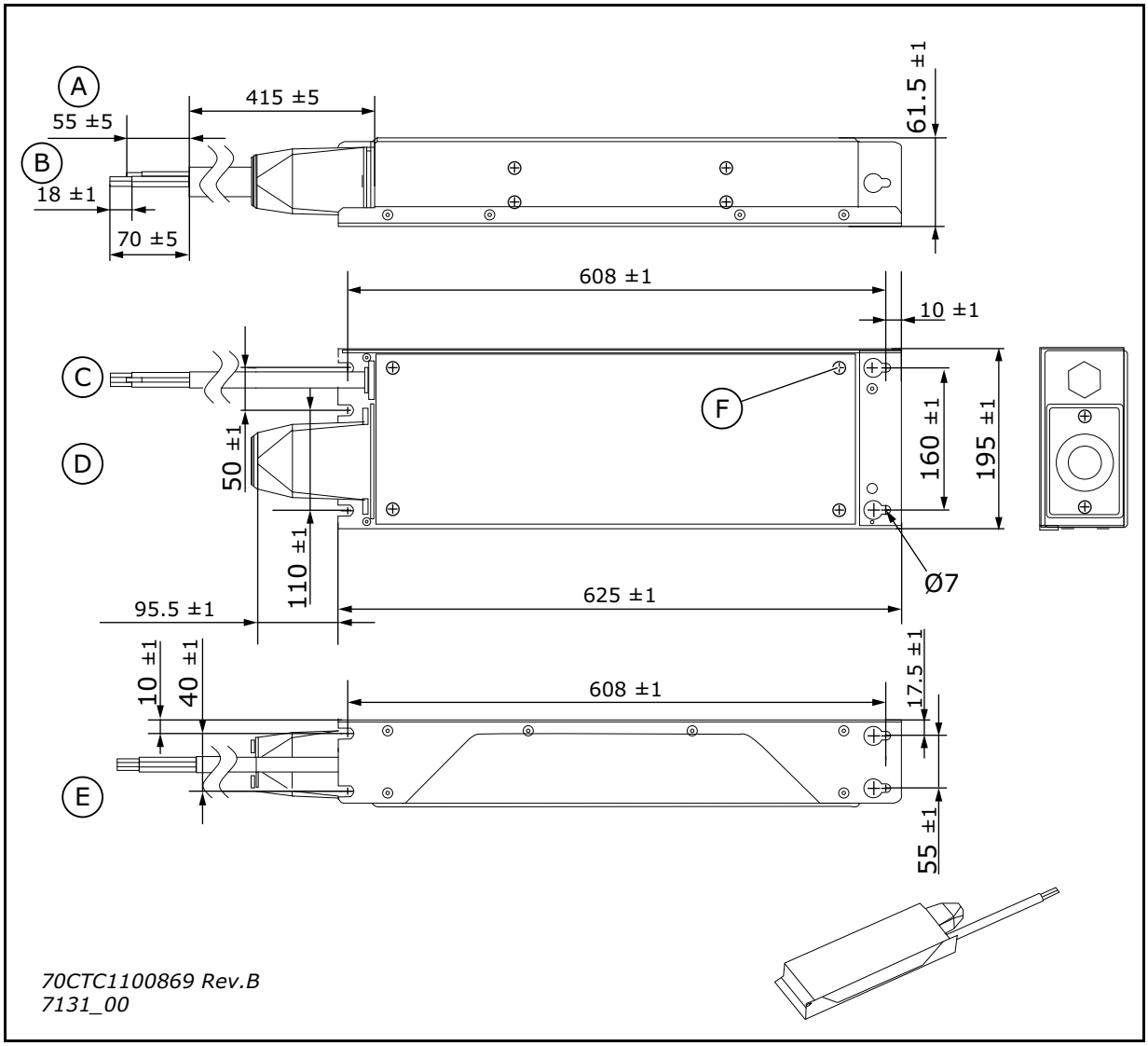

#	Reference	#	Reference
A	Yellow-Green	B	Stripping for all wires
C	Load	D	Line connector; Minimum 16 mm^2, Maximum 50 mm^2 Stripping length 24 mm Tightening torque 6 - 8 Nm
E	Cable 4x10 mm^2	F	Maximum screw length for AC drive mounting; M6x16

Figure 13. 70CTC1100869 Rev. B enclosure size 6

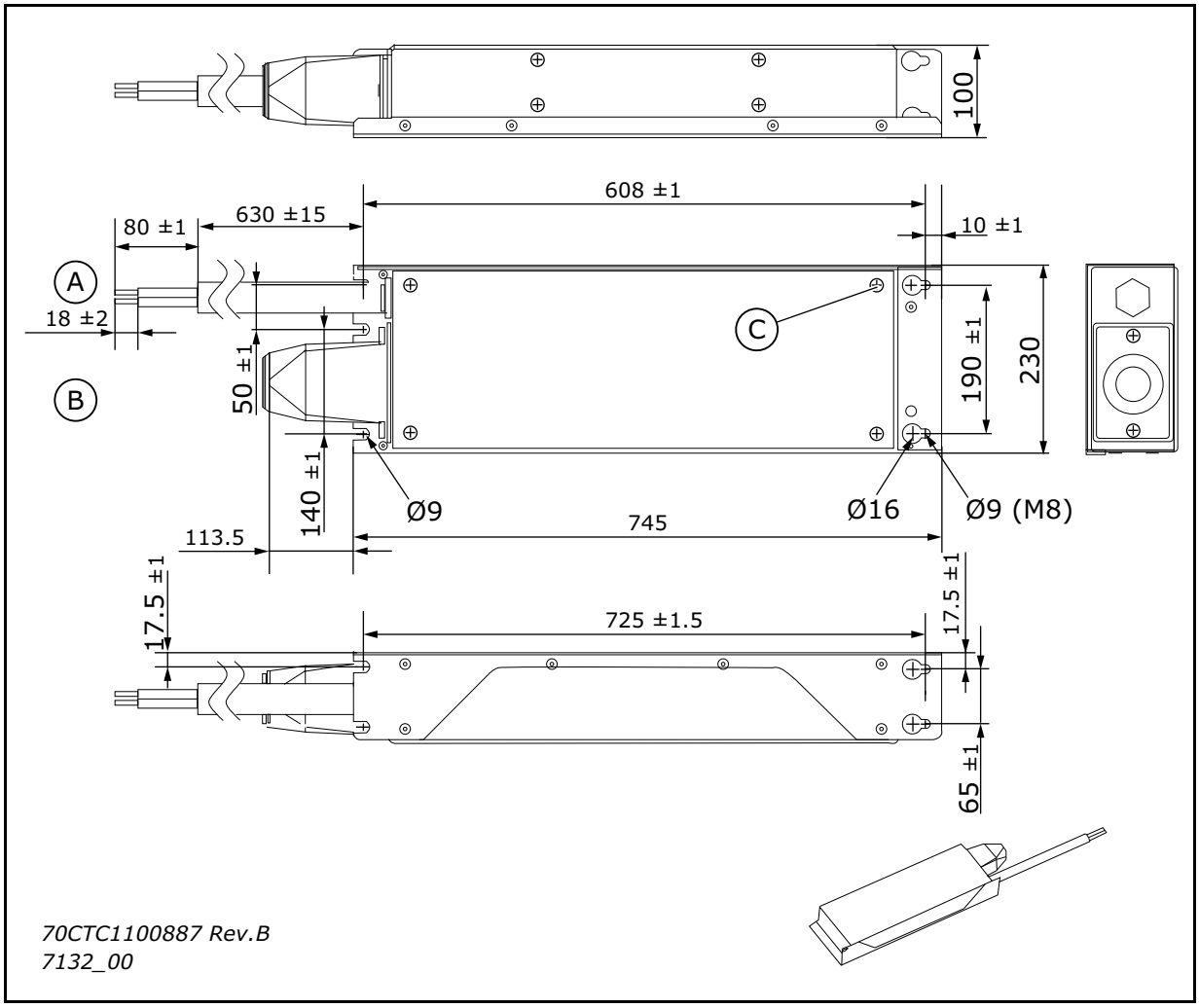

#	Reference	#	Reference
A	Load	B	Line connector; Minimum 35 mm^2, Maximum 95 mm^2 Tightening torque 15 - 20 Nm
C	Maximum screw length for AC drive mounting; M6x16		

Figure 14. 70CTC1100887 Rev. B enclosure size 7

3.1.2 External RFI filters

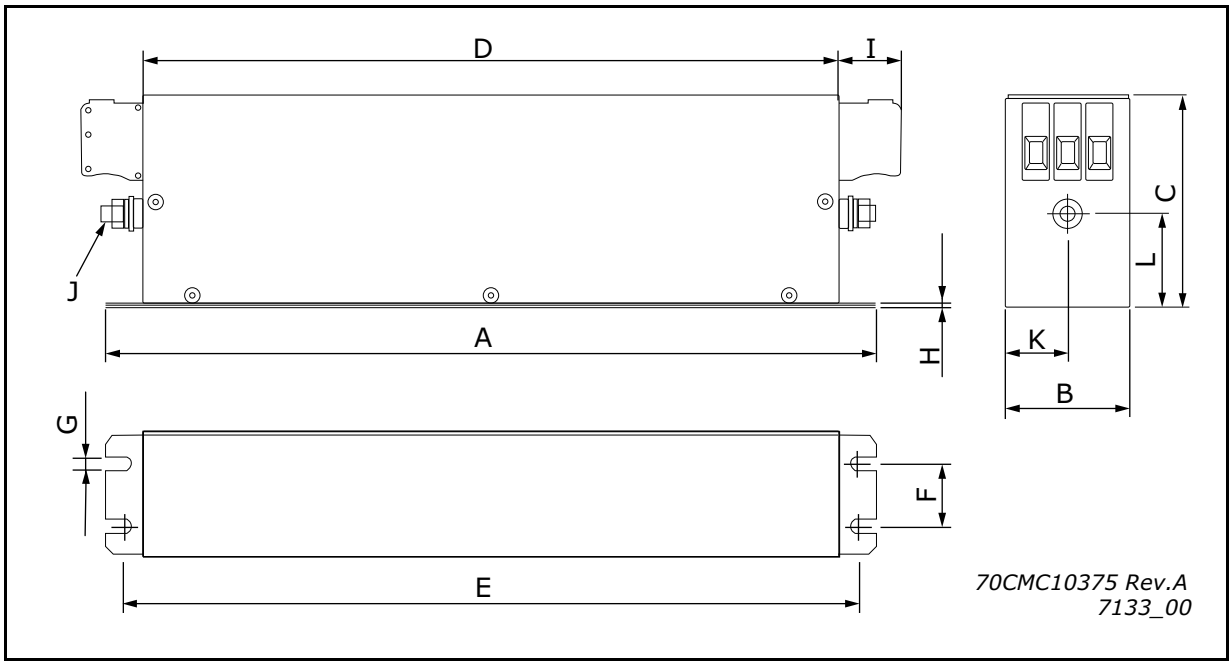

Figure 15. 70CMC10375 Rev. A

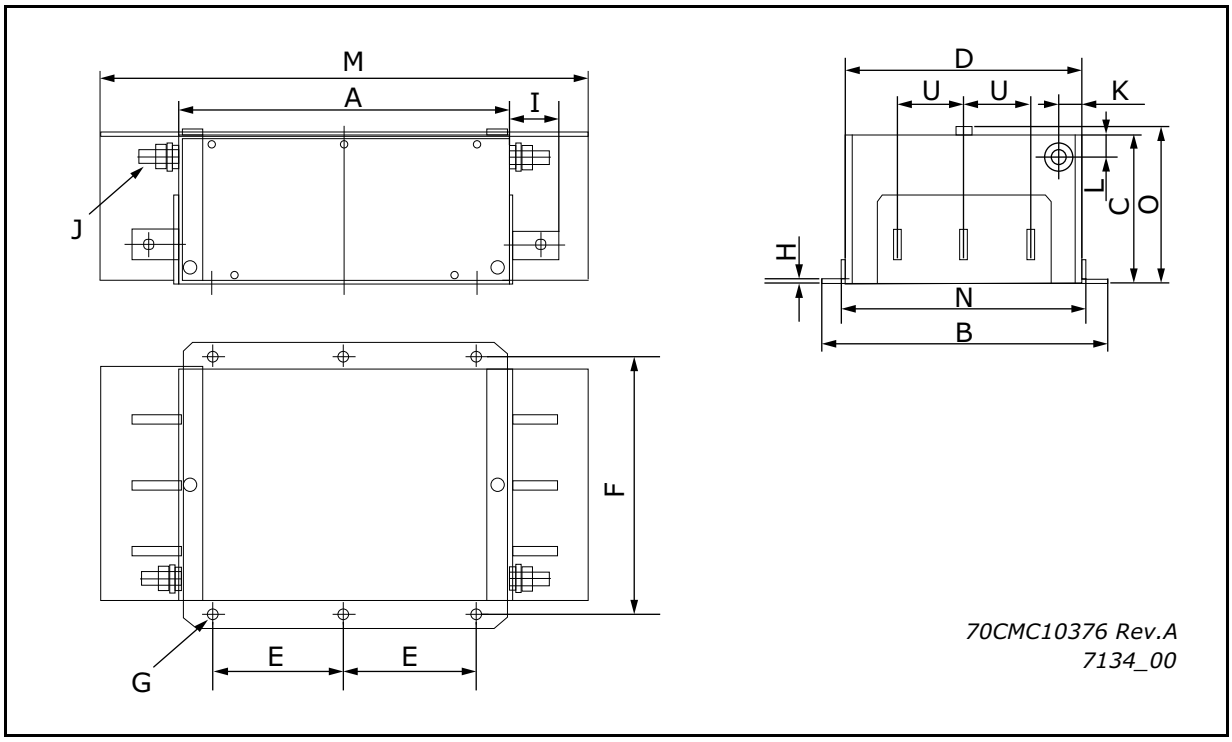

Figure 16. 70CMC10376 Rev. A

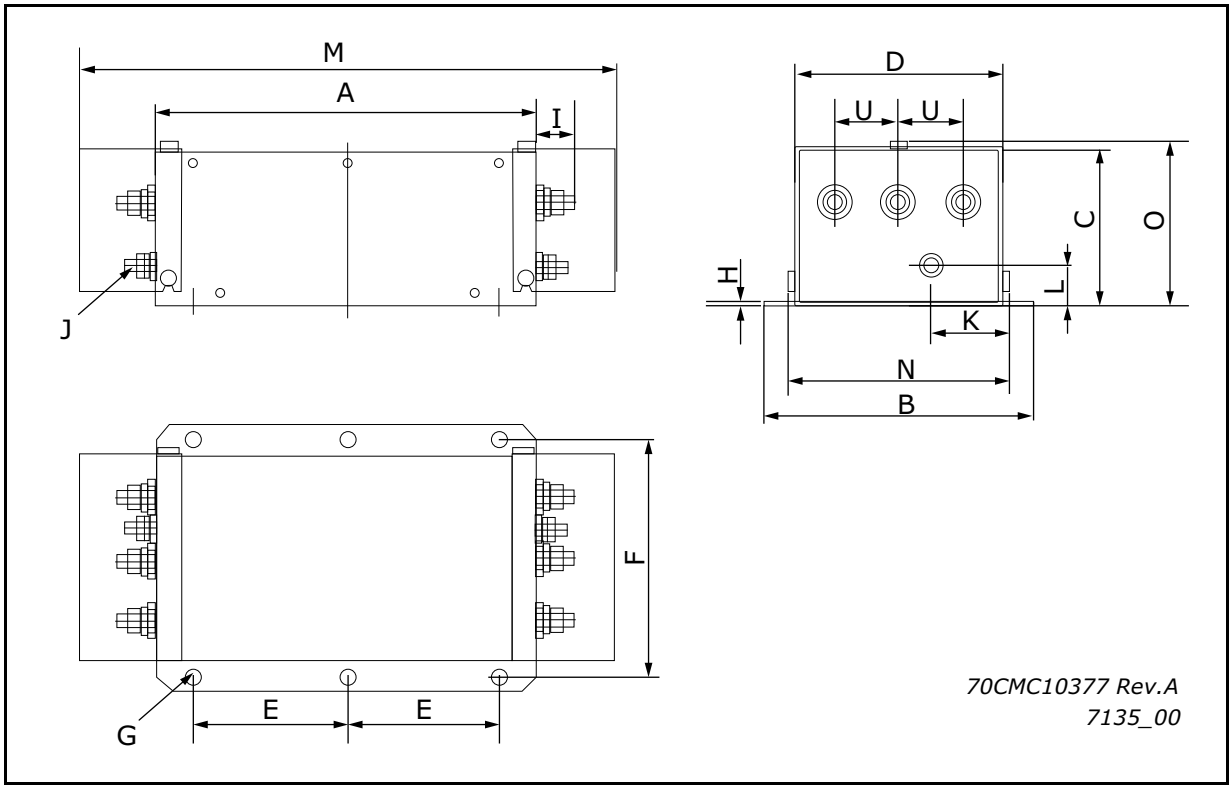

Figure 17. 70CMC10377 Rev. A

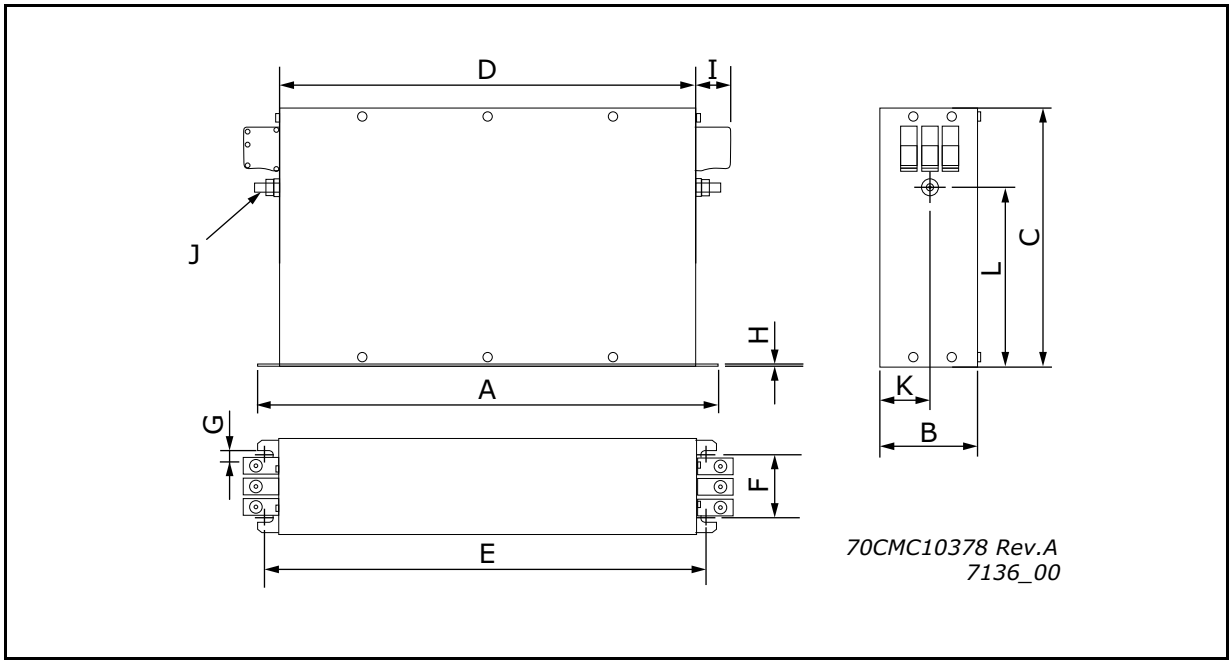

Figure 18. 70CMC10378 Rev. A

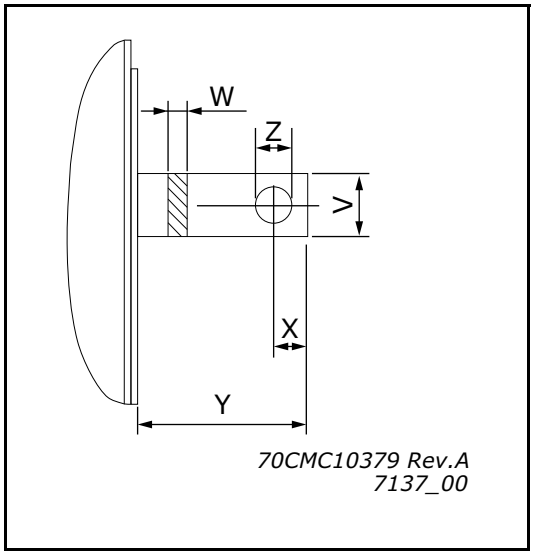

Figure 19. 70CMC10379 Rev. A

3.1.3 dU/dT- and sine-filters

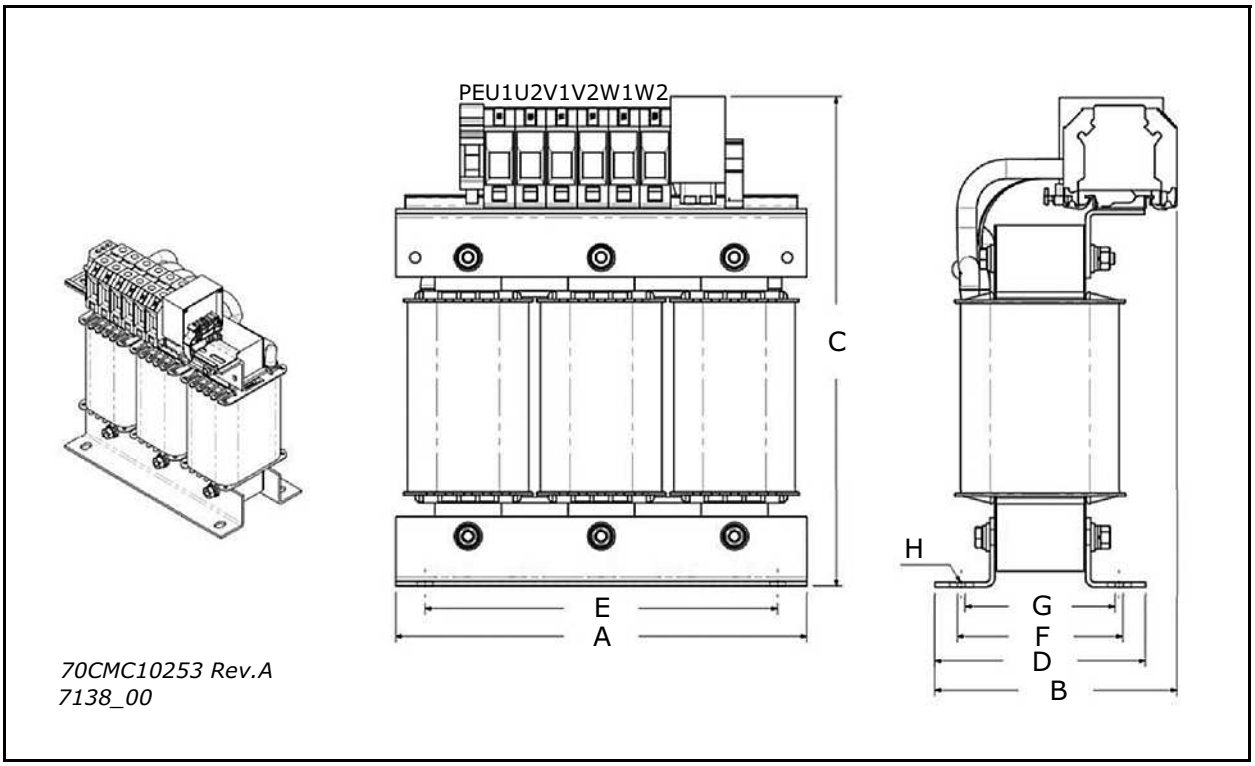

Figure 20. 70CMC10253 Rev. A

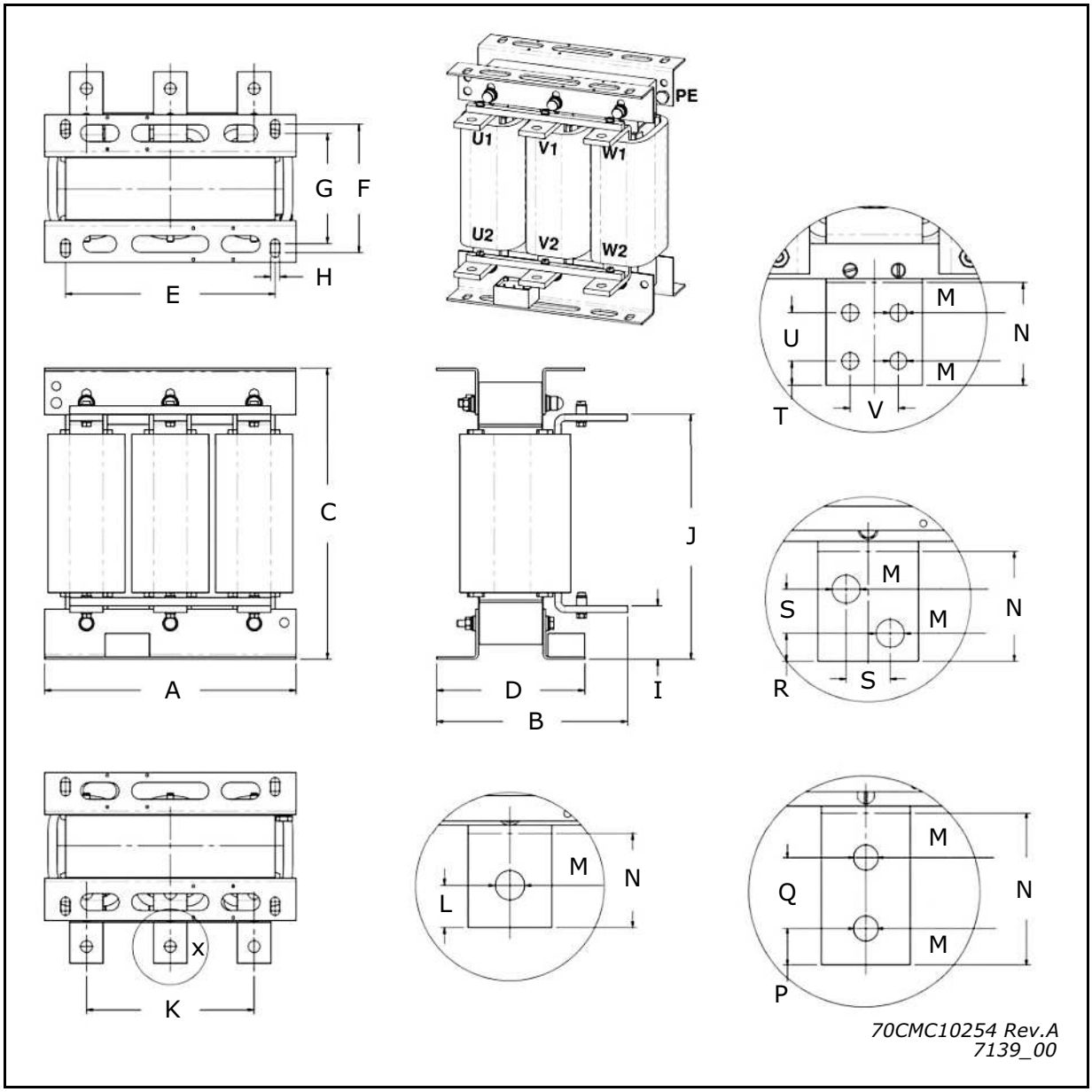

Figure 21. 70CMC10254 Rev. A

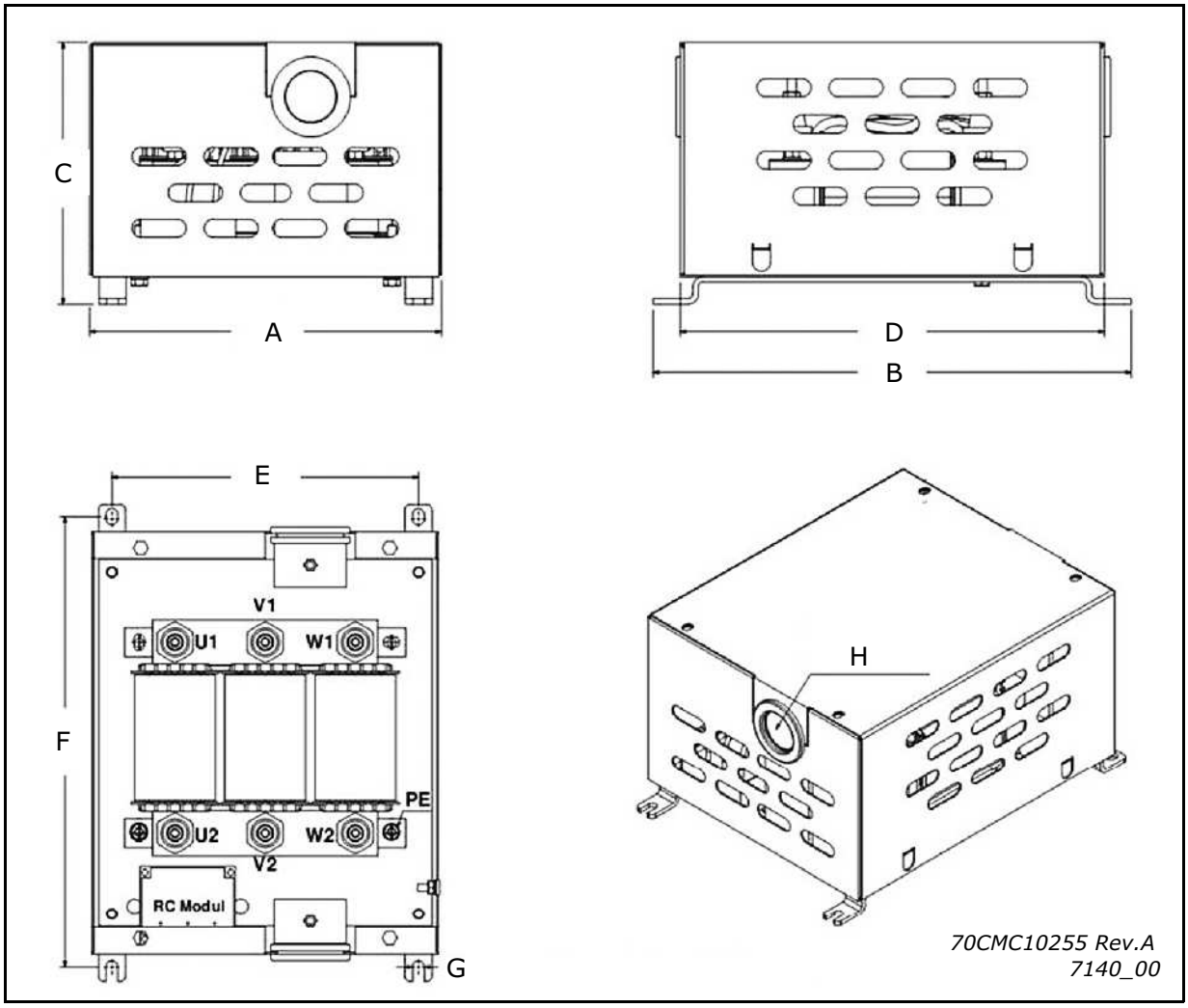

#	Reference	#	Reference
H	Cable maximum diameter		

Figure 22. 70CMC10255 Rev. A

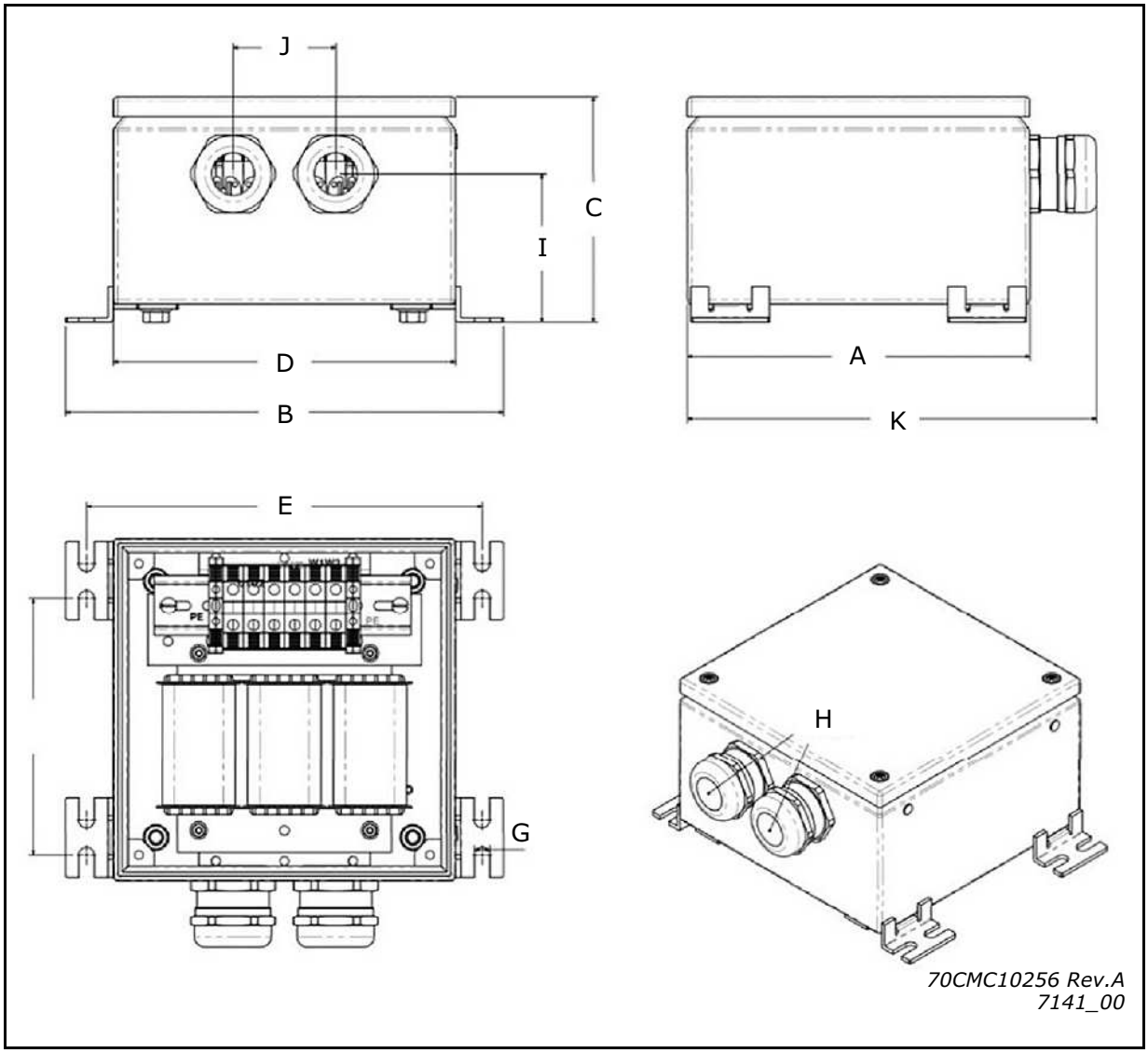

#	Reference	#	Reference
H	Cable maximum diameter		

Figure 23. 70CMC10256 Rev. A

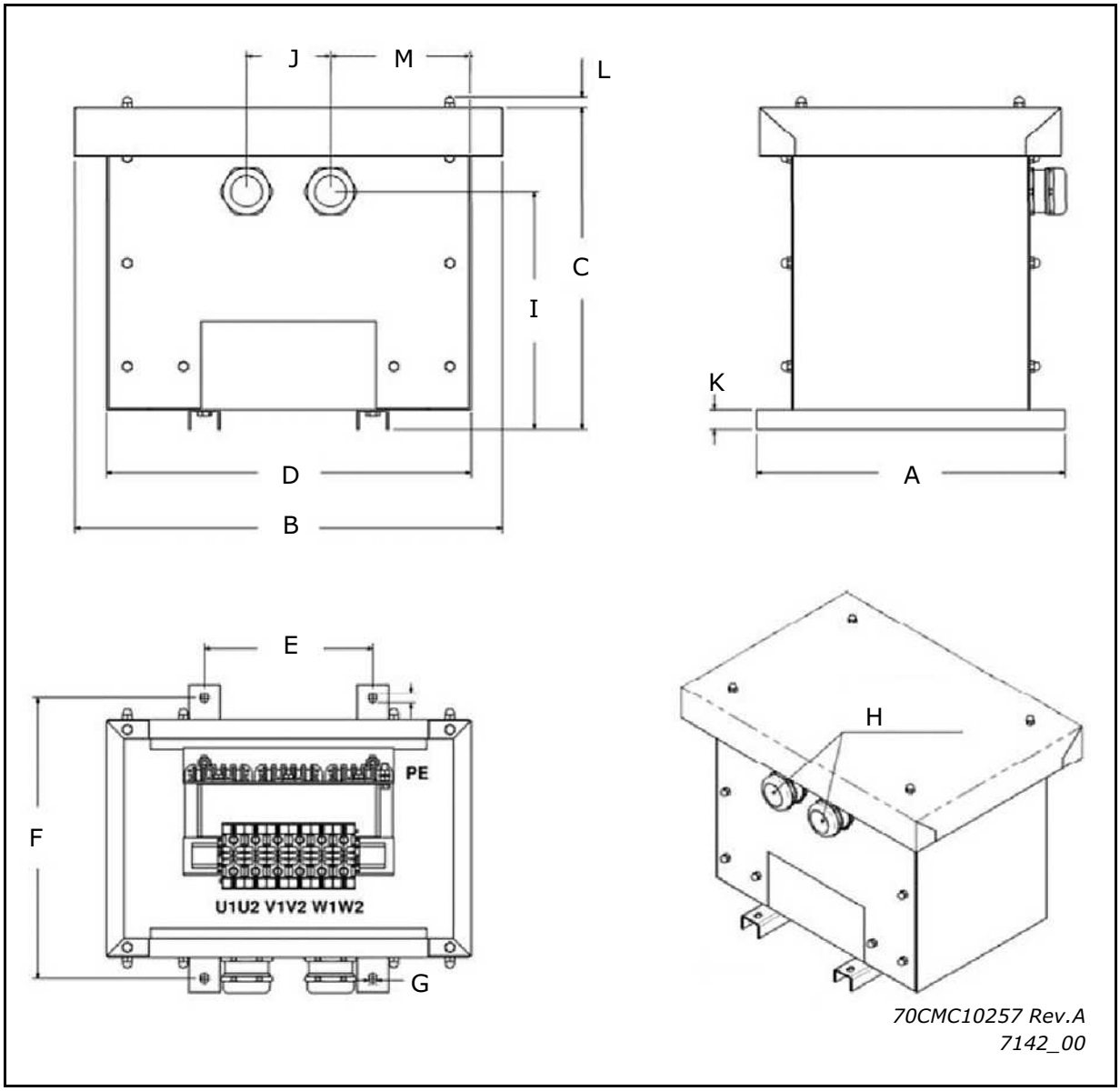

#	Reference	#	Reference
H	Cable maximum diameter		

Figure 24. 70CMC10257 Rev. A

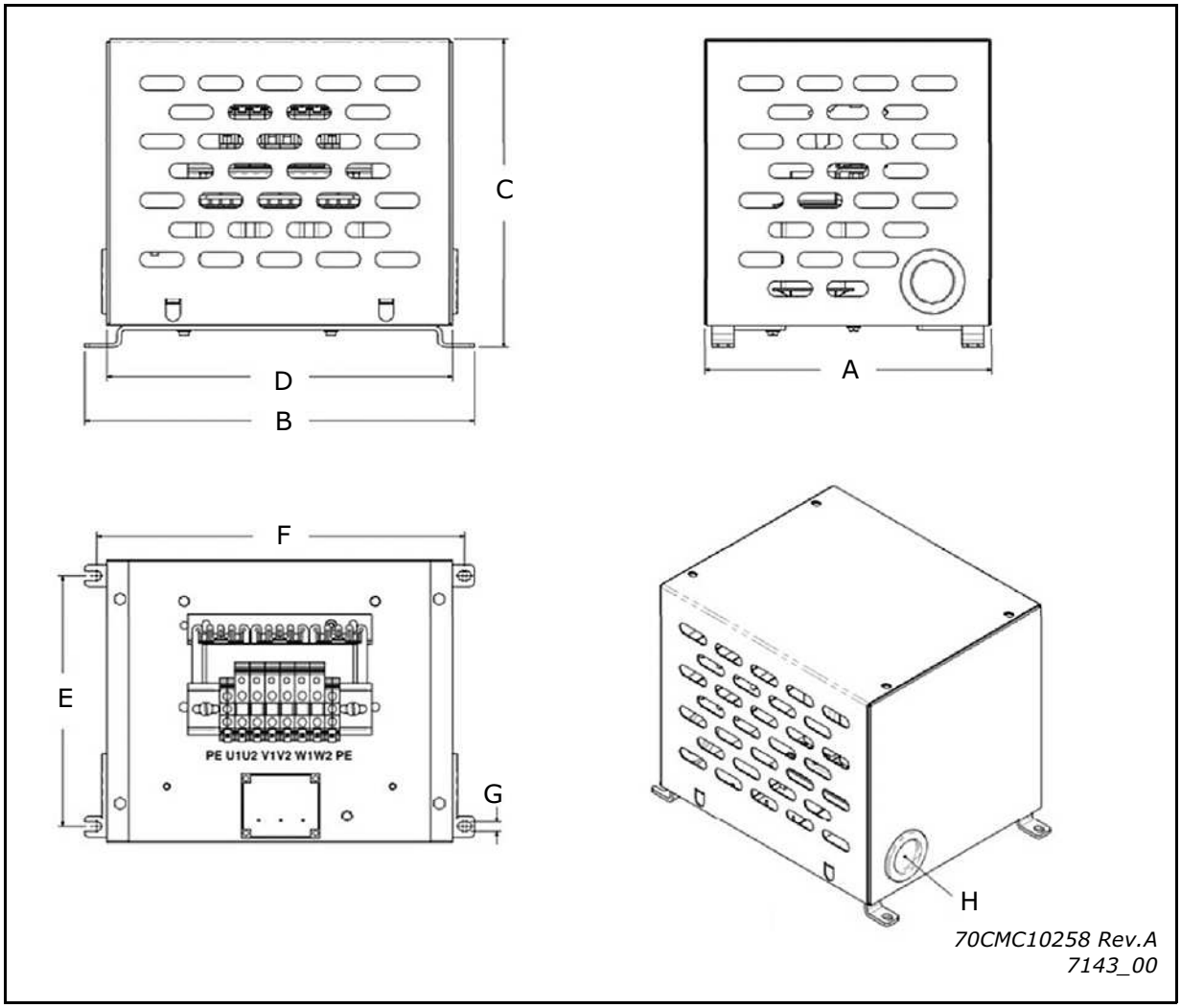

#	Reference	#	Reference
H	Cable maximum diameter		

Figure 25. 70CMC10258 Rev. A

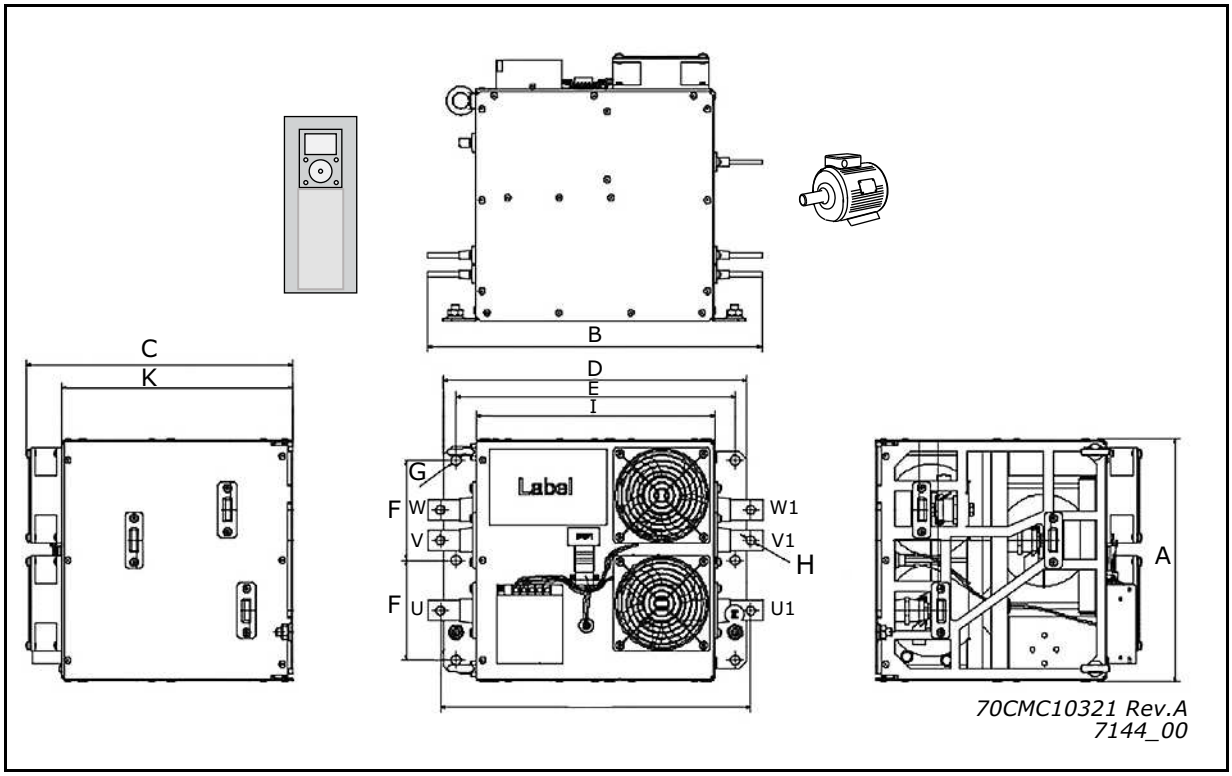

Figure 26. 70CMC10321 Rev. A

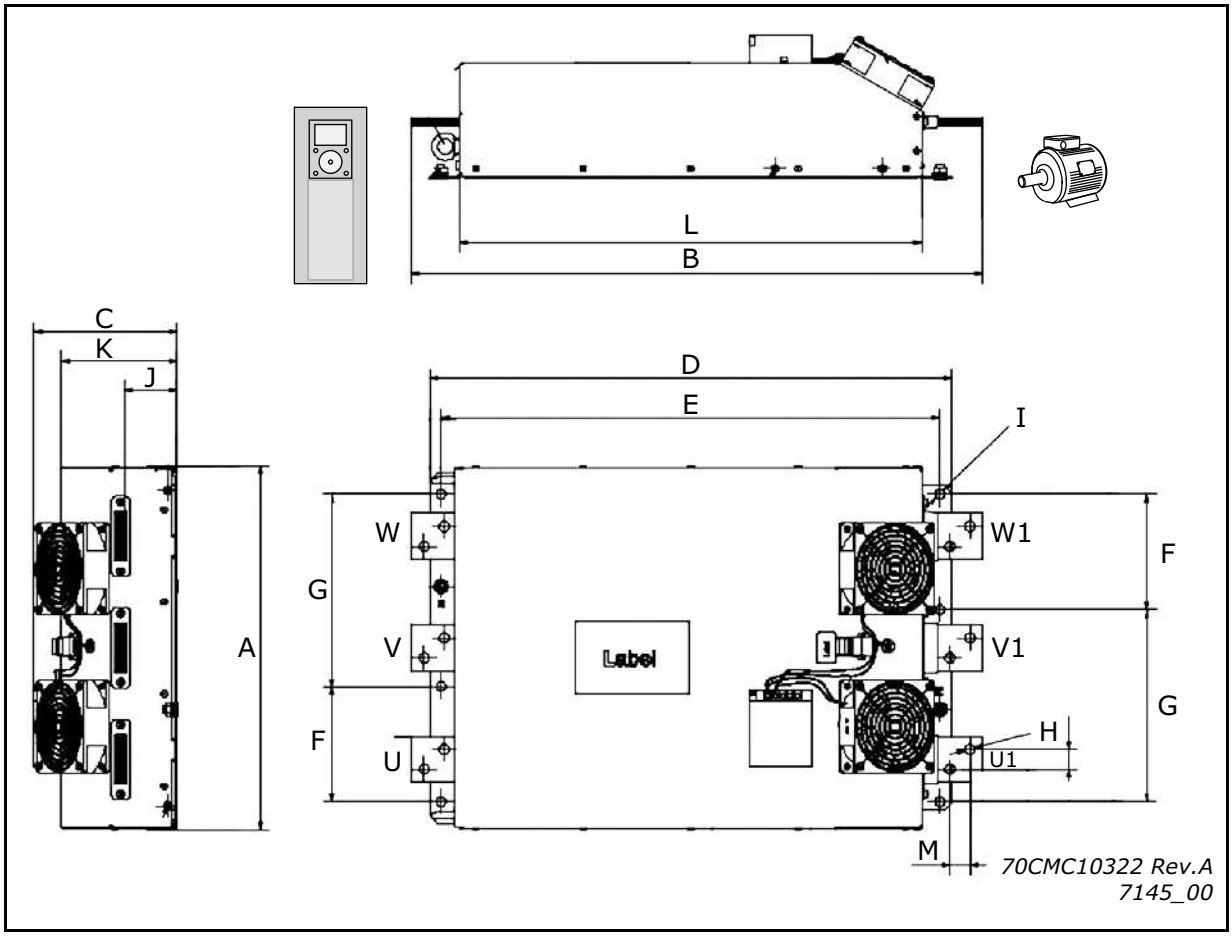

Figure 27. 70CMC10322 Rev. A

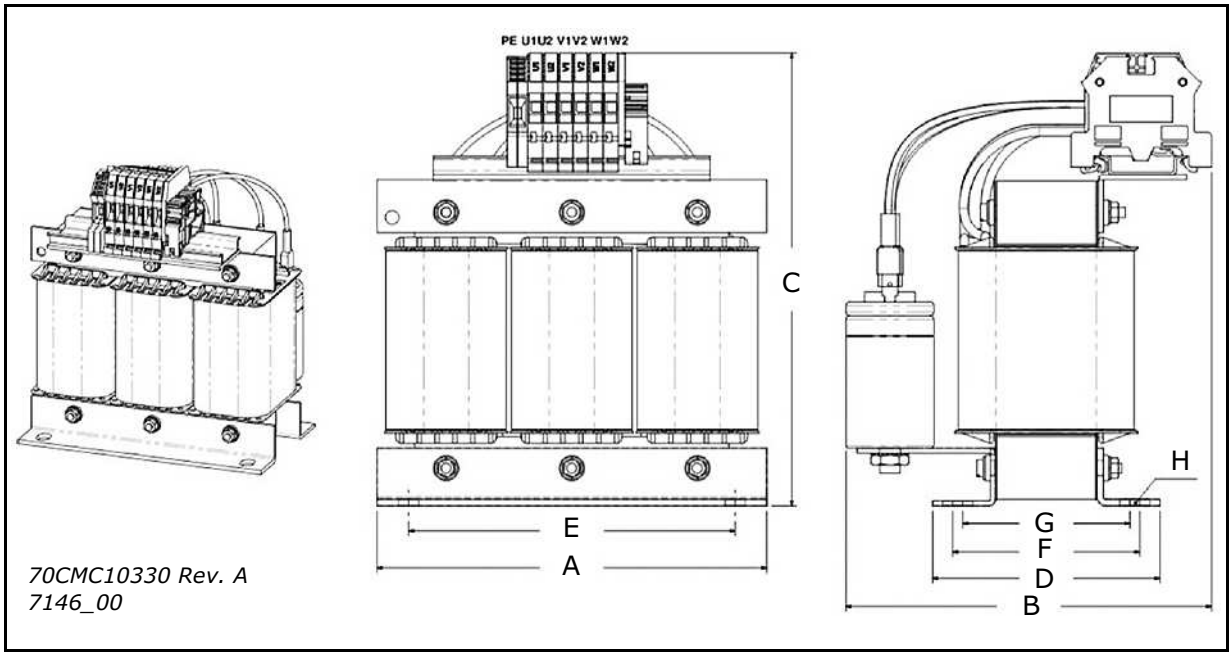

Figure 28. 70CMC10330 Rev. A

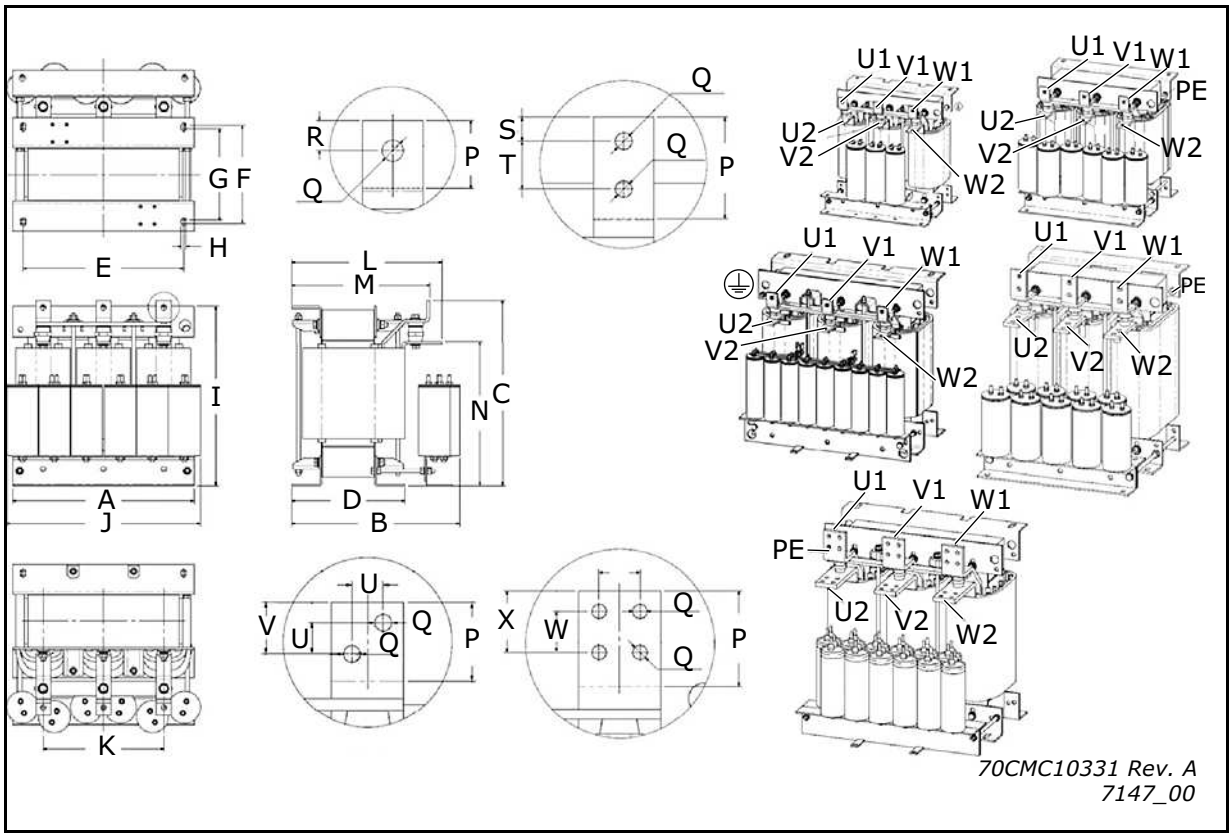

Figure 29. 70CMC10331 Rev. A

3.2 dU/dt-filters in enclosed drive

Figure 30 represents a dU/dt filter with drive and main switch in enclosure. The main dimensions of the drive are 2200 x 600 x 600 mm (HxWxD).

This representation includes all dU/dt filters up to 600 A with or without drive in enclosure .

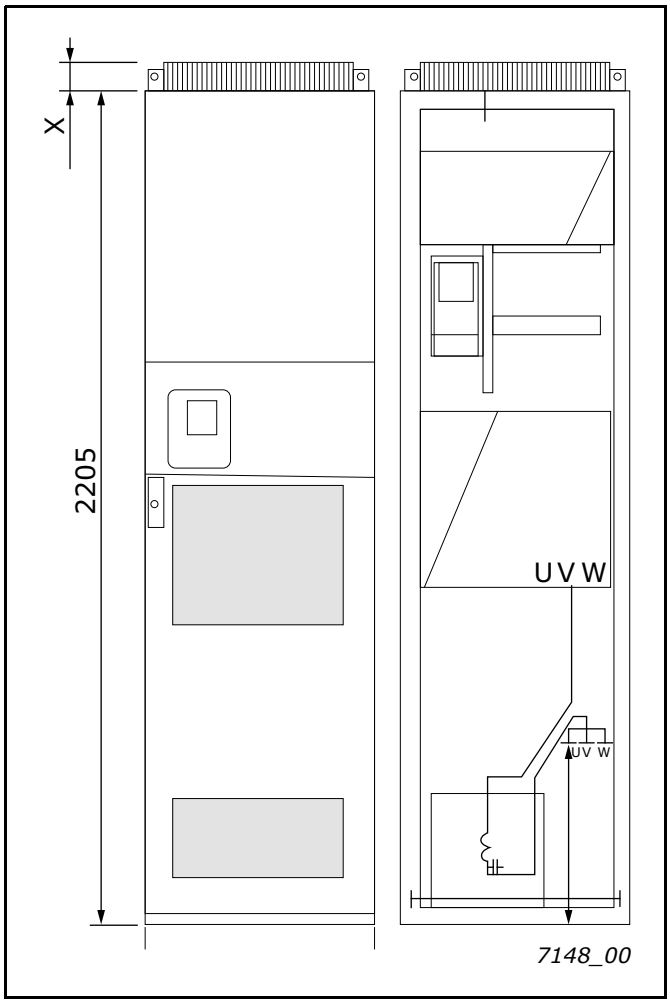

Figure 30. dU/dt filter with drive and main switch in enclosure

- In NFS_CHK is illustrated 2 x chokes up to 650 A each in a single enclosure with semiconductor fuses. The main dimensions of the drive are 2000 x 400 x 600 mm (HxWxD).
- In IUS_12_DUT CTRL is shown 2 x dU/dt-filter up to 600 A each in a single enclosure with control plate, control units, control auxiliaries and other accessories. The main dimensions of the drive are 2000 x 400 x 600 mm (HxWxD).

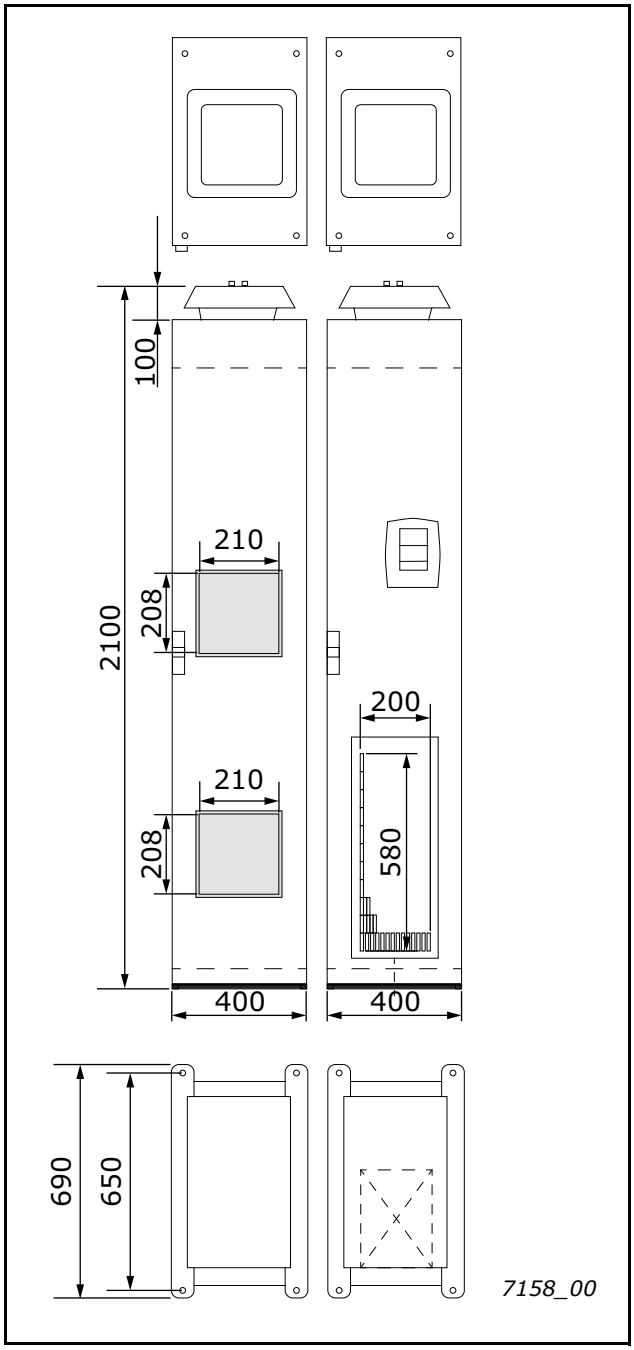

Figure 31. Chokes and dU/dt filters in enclosure

Figure 32 represents a dU/dt filter with drives in enclosure. The main dimensions of the drive are 2200 x 800 x 600 mm (HxWxD).

This representation includes all dU/dt filters up to 1500 A with or without drive in enclosure .

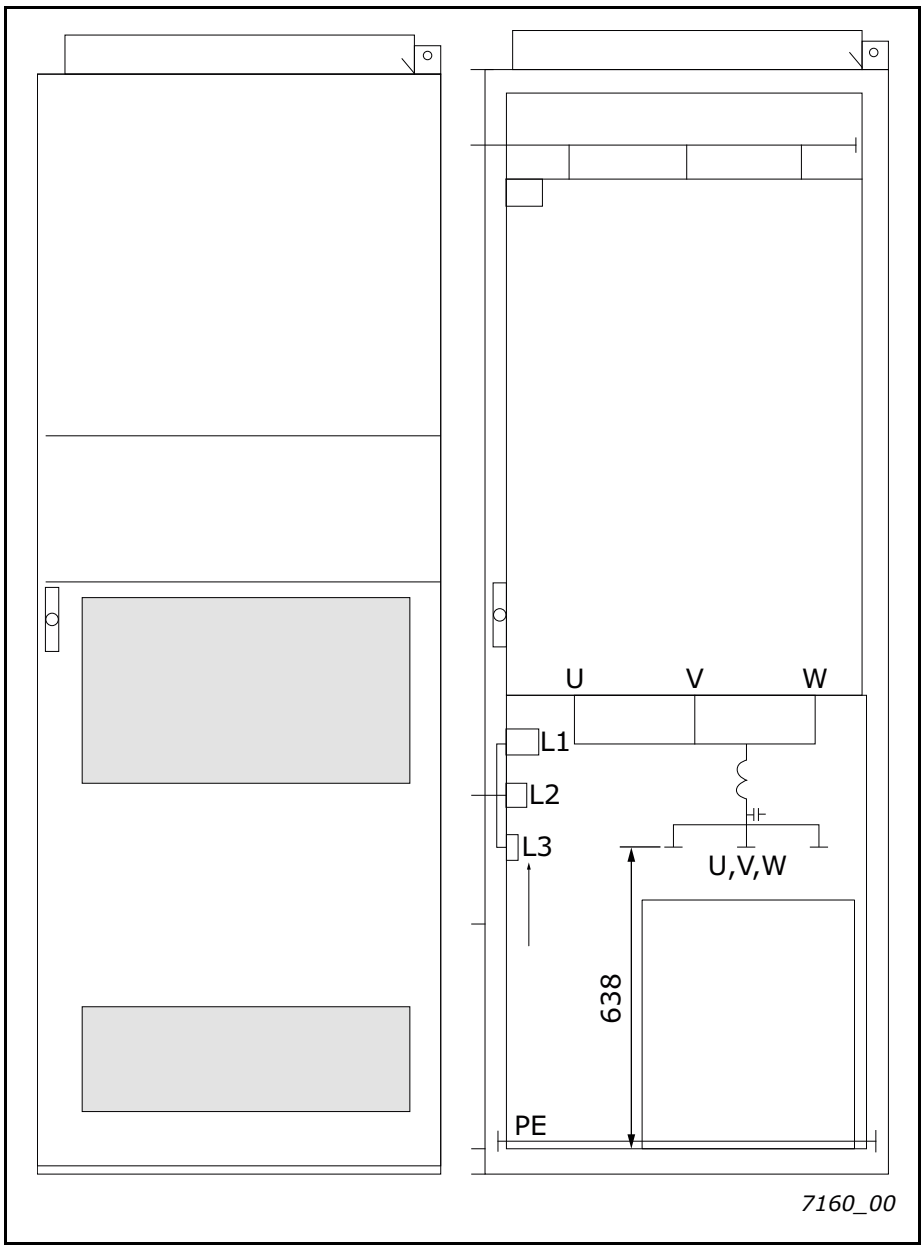

Figure 32. dU/dt filter with drives in enclosure

In Figure 33, there is two dU/dt filters in a single enclosure. The main dimensions of the drive are 2200 x 400 x 600 mm (HxWxD).

This representation includes two dU/dt filters up to 600 A in single enclosure .

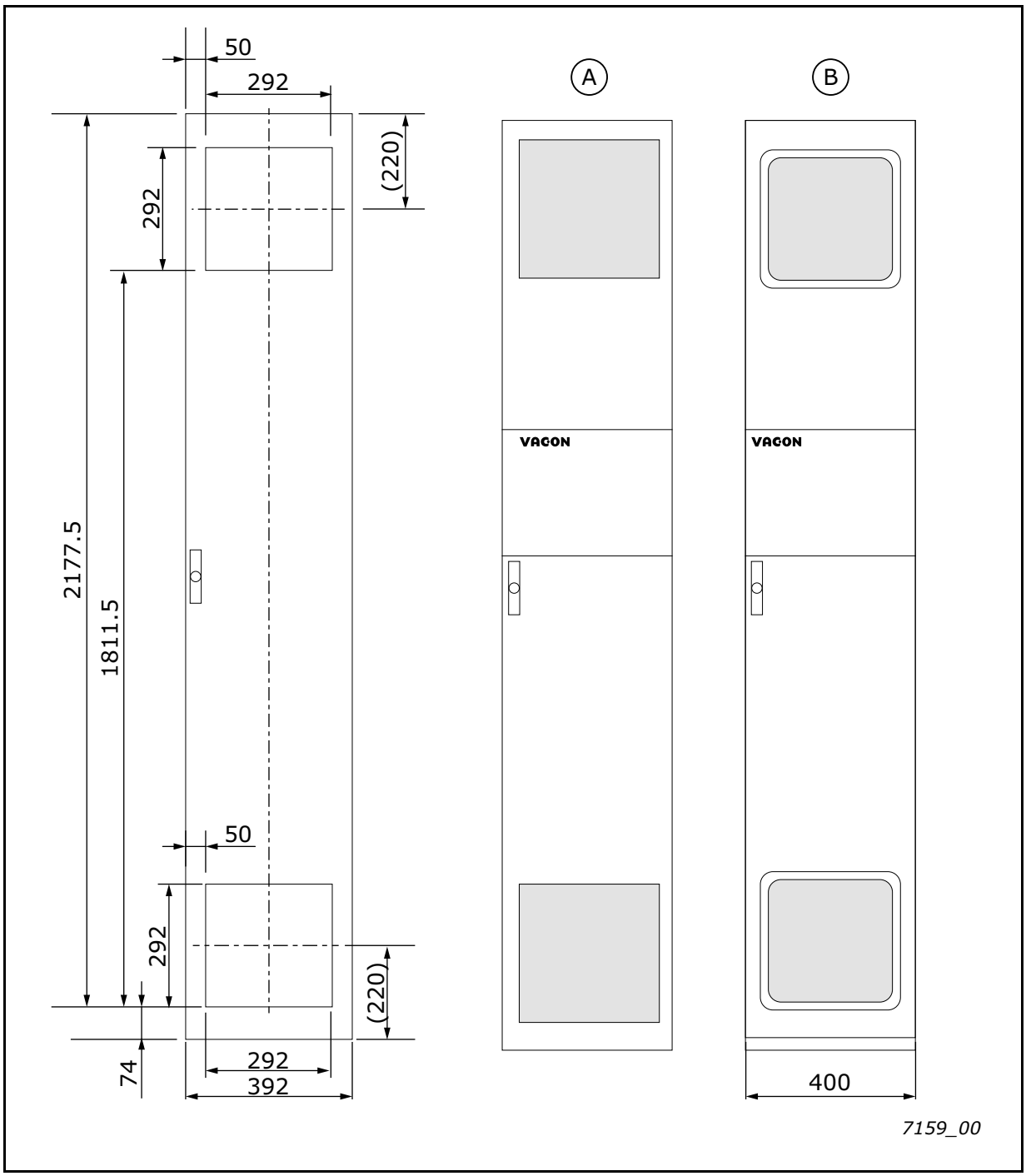

#	Reference	#	Reference
A	Rittal SK3243,200	B	Fandis FPF20KUG

Figure 33. Two dU/dt filters in single enclosure

Figure 34 represents a dU/dt filter with drive and main switch in enclosure. The main dimensions of the drive are 2000 x 400 x 600 mm (HxWxD).

This representation includes all dU/dt filters up to 2x80 A or 1x210 A with or without drive in enclosure .

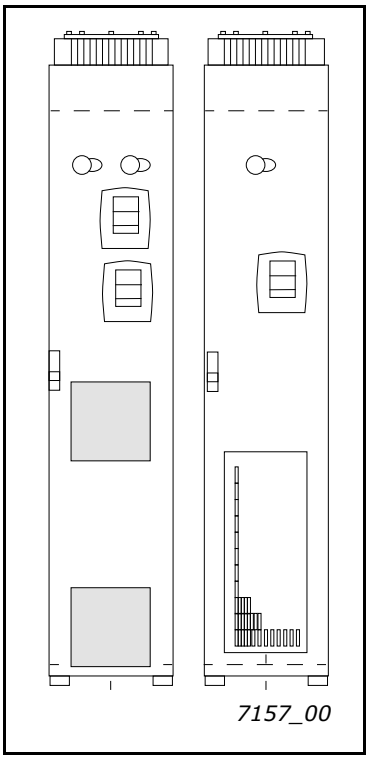

Figure 34. dU/dt filter with or without drive in enclosure

Figure 35 represents a dU/dt filter up to 1500 A in a single enclosure with control plate, control units, control auxiliaries and other accessories. The main dimensions of the drive are 2000 x 600 x 600 mm (HxWxD).

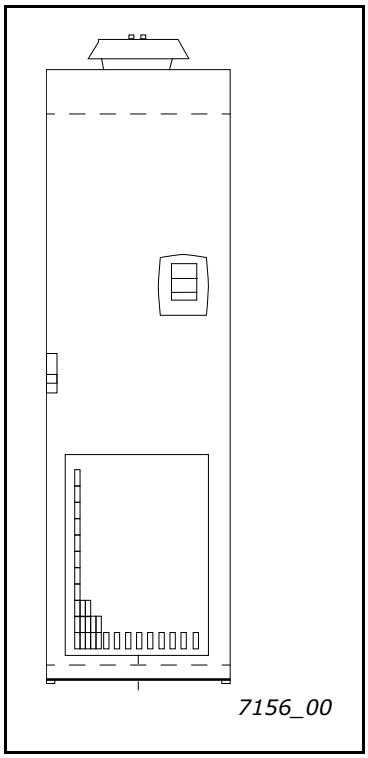

Figure 35. dU/dt filter in enclosure

3.3 Safe operating area for dU/dt-filters

The safe operating area for DUT-0280-6-0-S is shown in Figure 36 - assuming a cable capacitance of 750 pf/m. The values should be scaled in accordance with the actual cable capacitance. In case of multiple cables the capacitance is the sum of the cable capacitances.

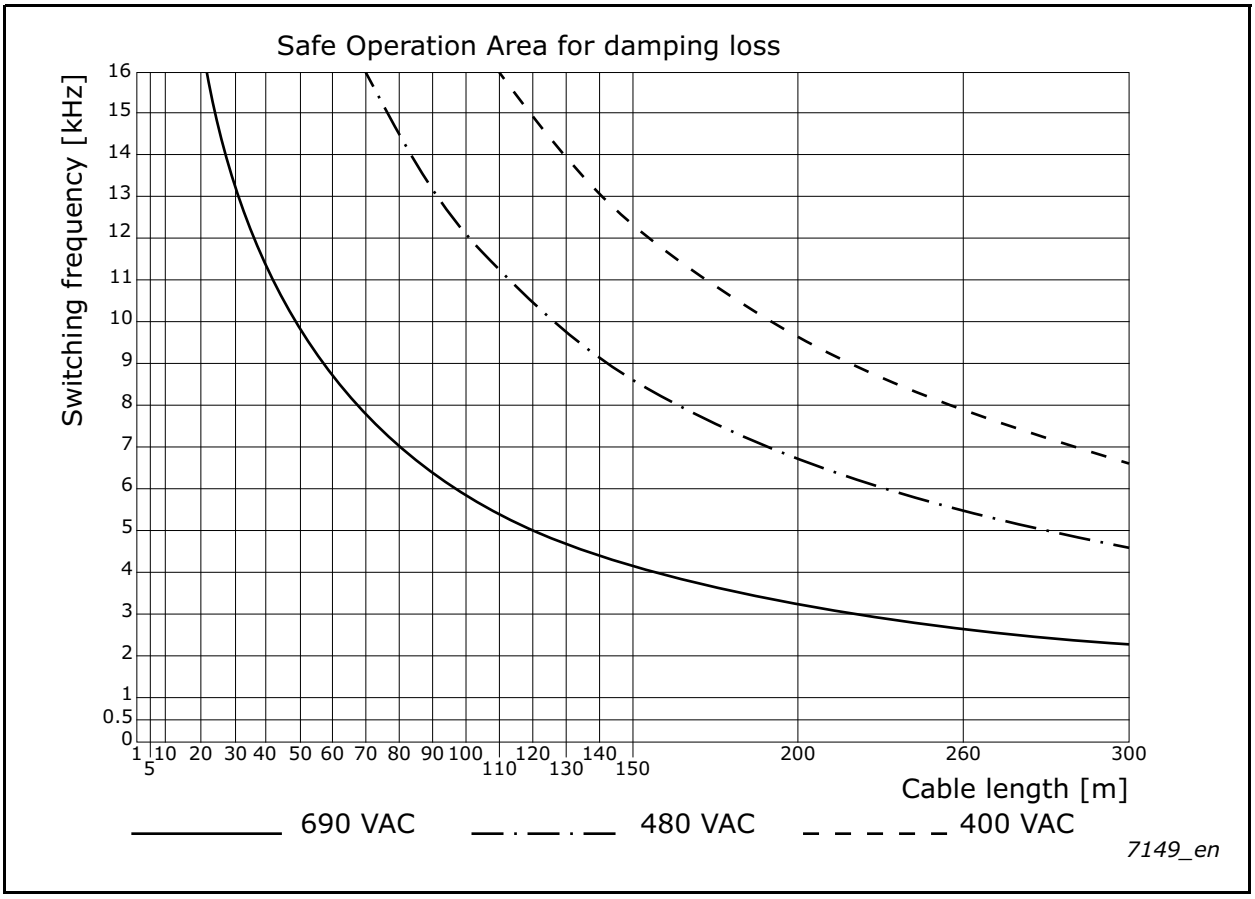

Figure 36. Safe operating area for DUT-0280-6-0-S

The safe operating area for DUT-0420-6-0-S is shown in Figure 37 - assuming a cable capacitance of 800 pf/m. The values should be scaled in accordance with the actual cable capacitance. In case of multiple cables the capacitance is the sum of the cable capacitances.

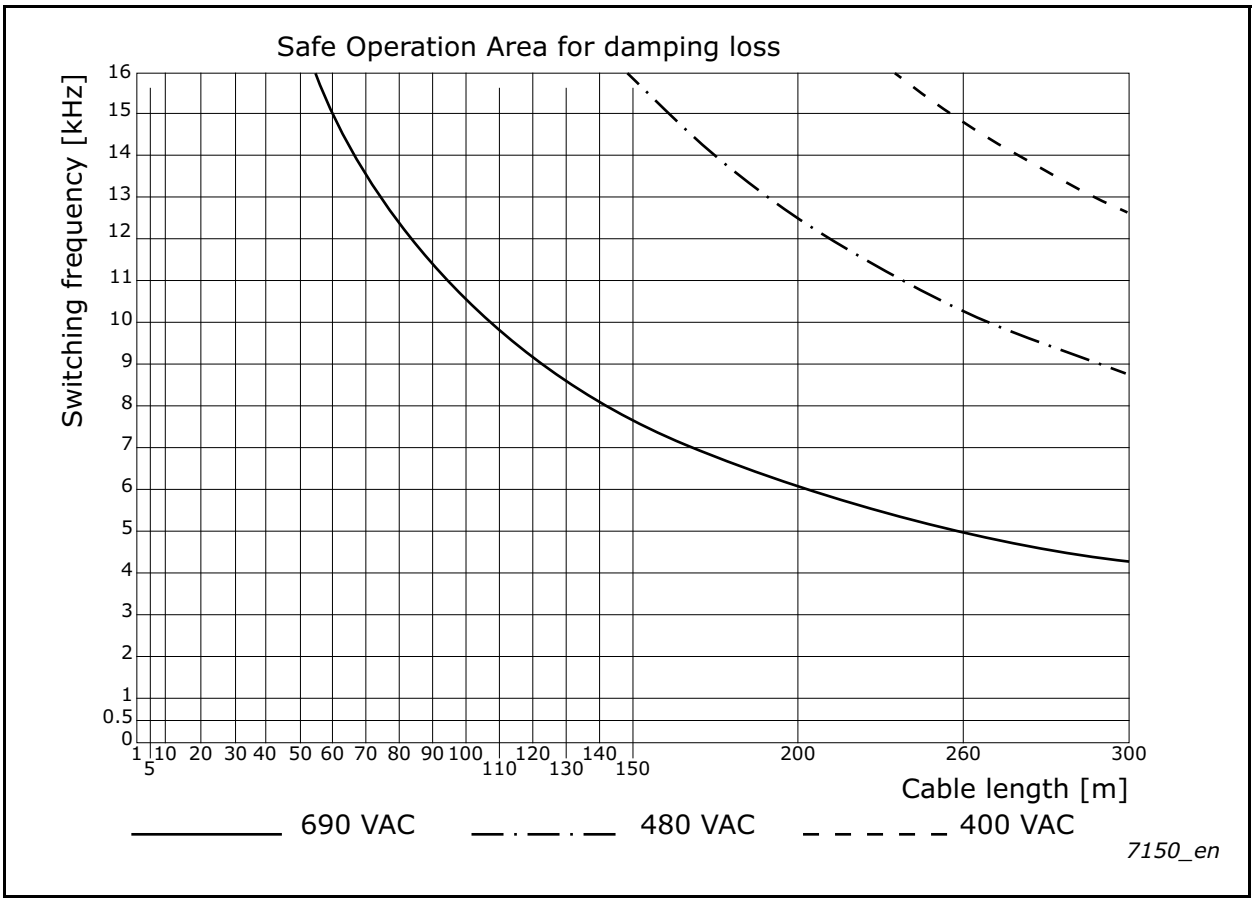

Figure 37. Safe operating area for DUT-0420-6-0-S

The safe operating area for DUT-0590-6-0-S is shown in Figure 38 - assuming a cable capacitance of 1700 pf/m. The values should be scaled in accordance with the actual cable capacitance. In case of multiple cables the capacitance is the sum of the cable capacitances.

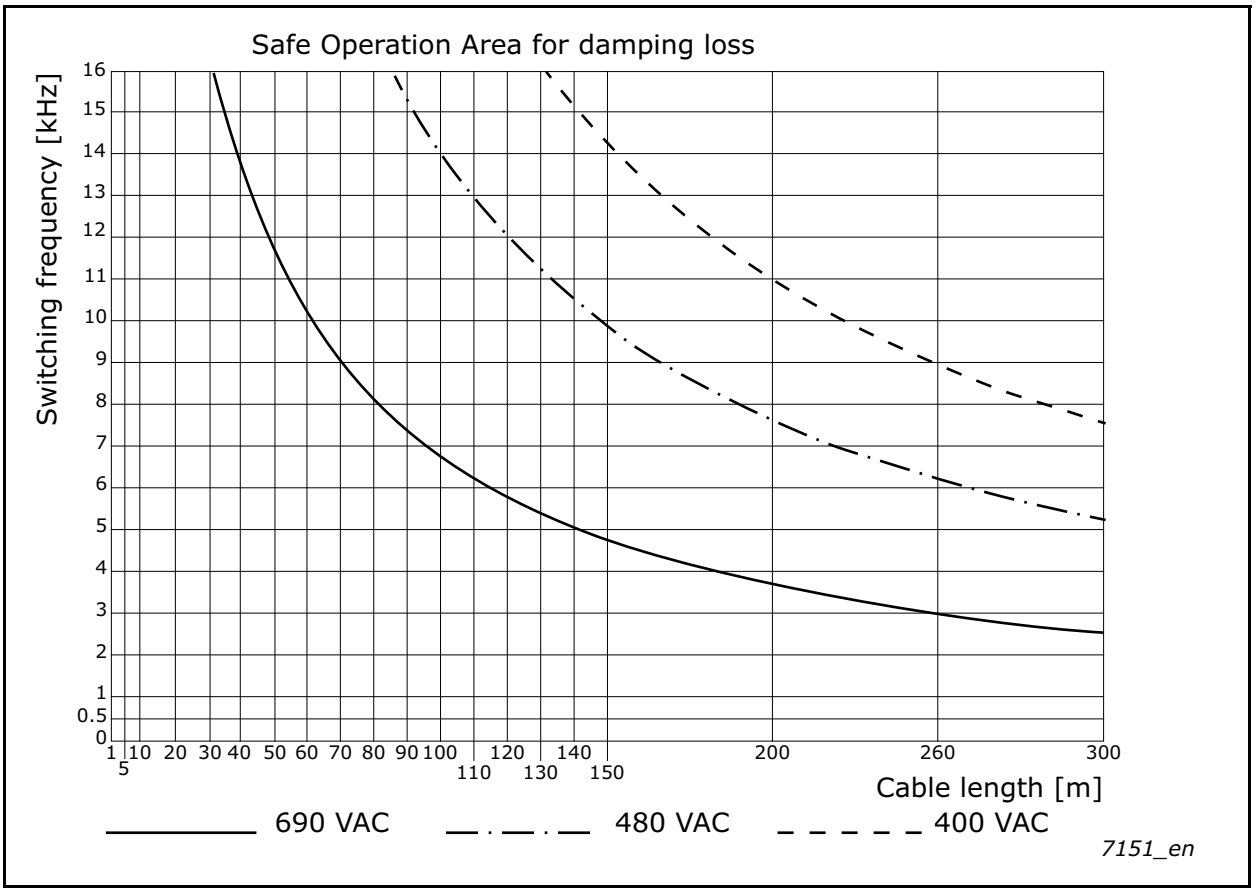

Figure 38. Safe operating area for DUT-0590-6-0-S

The safe operating area for DUT-0820-6-0-S is shown in Figure 39 - assuming a cable capacitance of 1700 pf/m. The values should be scaled in accordance with the actual cable capacitance. In case of multiple cables the capacitance is the sum of the cable capacitances.

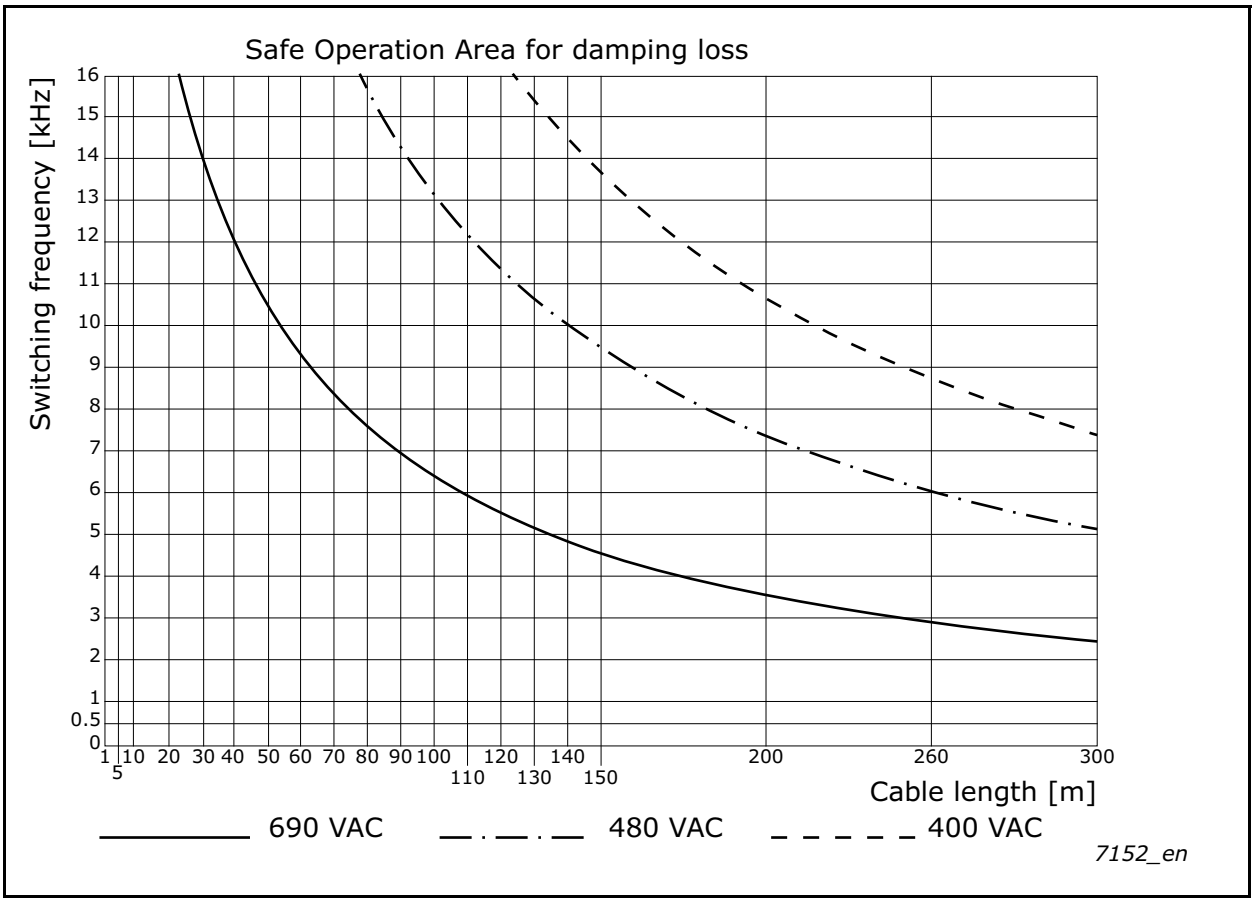

Figure 39. Safe operating area for DUT-0820-6-0-S

The safe operating area for DUT-1250-6-0-S and DUT-1600-6-0-S is shown in Figure 40 - assuming a cable capacitance of 1700 pf/m. The values should be scaled in accordance with the actual cable capacitance. In case of multiple cables the capacitance is the sum of the cable capacitances.

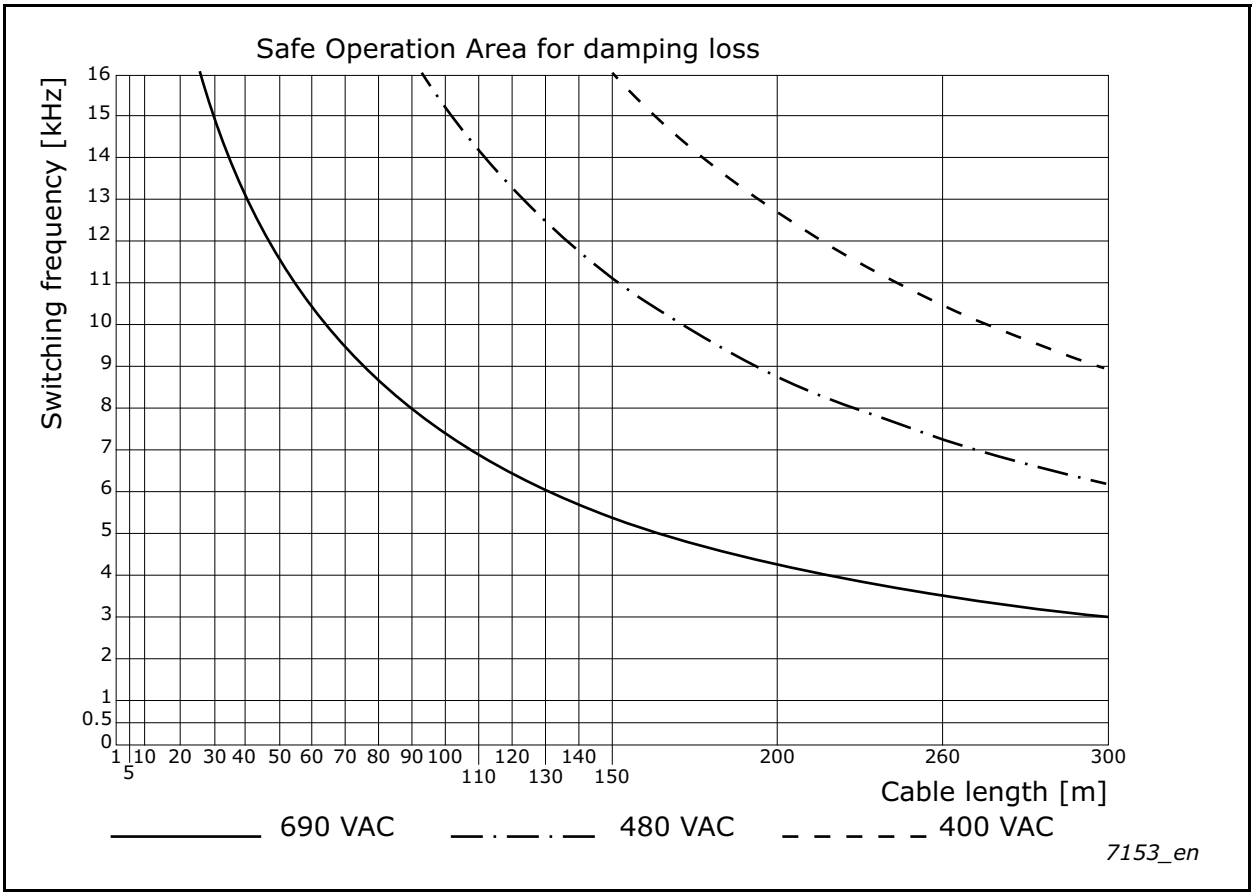

Figure 40. Safe operating area for DUT-1250-6-0-S and DUT-1600-6-0-S

3.4 Output current for frequency operation

P-type dU/dt filters

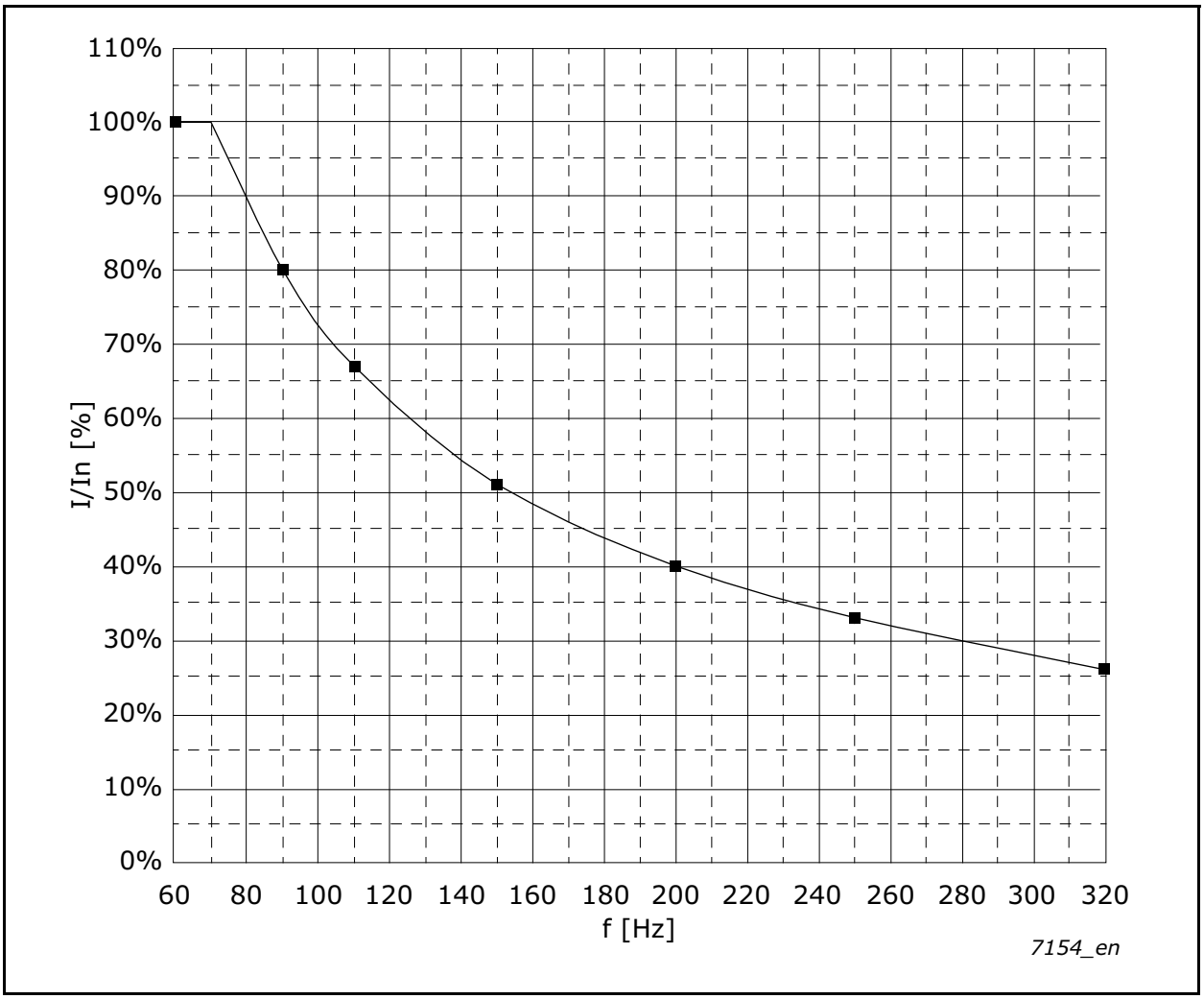

Figure 41. P-type dU/dt filters output current derating as a function of output frequency

S-type dU/dt filters

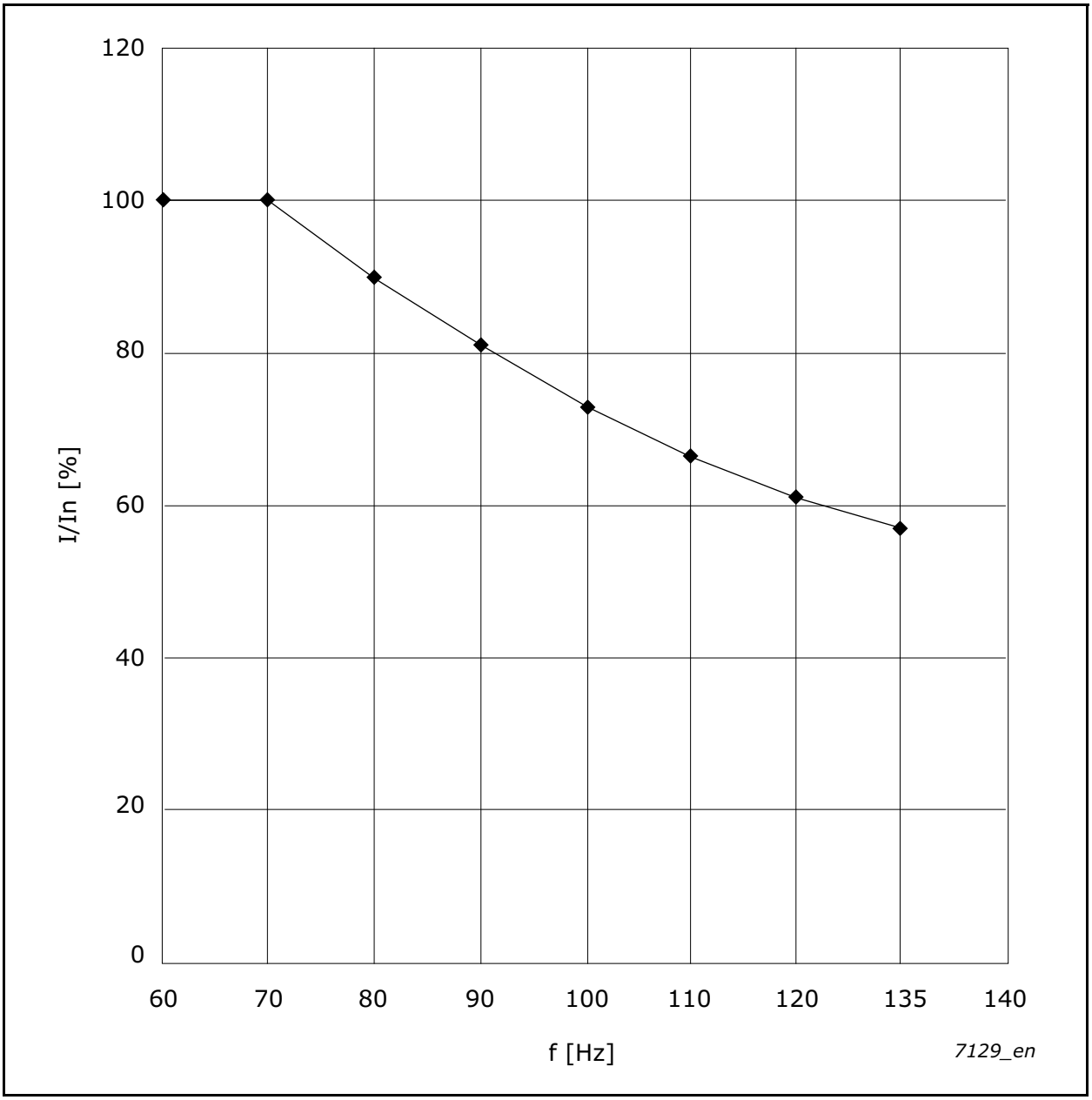

Figure 42. S-type dU/dt filters output current derating as a function of output frequency

Sine filters

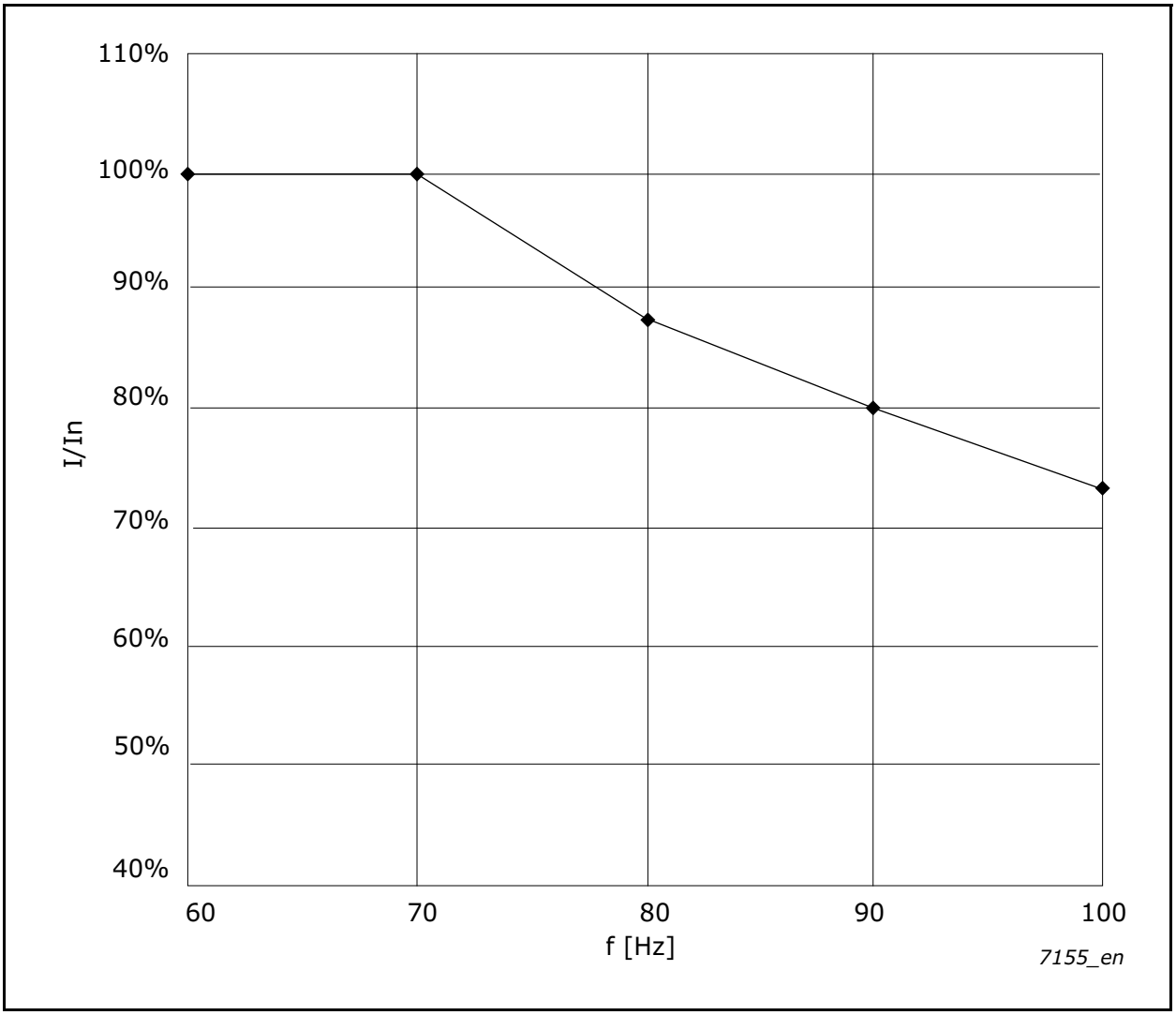

Figure 43. Sine filters output current derating as a function of output frequency

VACON®

www.danfoss.com

Document ID:
DPD01805C
Rev. C

Vacon Ltd
Member of the Danfoss Group
Runsorintie 7
65380 Vaasa
Finland